CHECKLIST: LAND USE PETITION

JOHNSON COUNTY DEPARTMENT OF PLANNING AND ZONING

All of the following items are required for a complete land use petition application.

- [x] One completed **Checklist** *(this form).*

- [x] One completed **Application**, signed by the owner of the subject property or an authorized agent, notarized.

- [x] One copy of the property **Legal Description**, most likely a recorded deed, with Recorder's Stamp .The deed is available at the Johnson County Recorder's Office, 86 West Court Street, Franklin, Indiana.

N/A [ ] One signed, notarized **Owner Consent Form** (required only if the petitioner does *not* own the subject property).

- [x] Three copies of a **Site Plan** (for Variance and Special Exception petitions only; a site plan is *not* required for a rezoning). The site plan must clearly and accurately show the entire layout of the property including all structures, drives, parking areas and uses related to or proposed with the petition. The site plan must also include a north arrow, and must be drawn to scale. See the attached Sample Site Plan.

- [x] One completed **Findings of Fact** form (for Variance and Special Exception petitions only; Findings of Fact are *not* required for a rezoning). See the attached guidance sheet.

- [x] One **Plan of Operation** (for Variance of Use and Special Exception petitions only). The Plan of Operation should include, at minimum, information about anticipated numbers of customers and employees, shipping and receiving, waste handling, hours of operation, materials use, storage and display, and other site activities and operations.

- [x] One non-refundable application **filing fee**. Checks are payable to "Johnson County". One signed On-site notice refundable deposit form.

- [x] One **refundable deposit** for the On-Site Public Notice sign. An On-Site Notice sign must be placed in a conspicuous location along the subject property's street frontage(s).

- [x] **Contact person** information. The Contact Person will be notified when Legal Notice is prepared, will be contacted if additional information is necessary, will receive the written staff report prior to the hearing, and will represent the petition at the hearing.

Contact Person: Russell Brown

Address: 320 N. Meridian Street, Suite 1100

City, State, ZIP: Indianapolis, IN 46204

Phone number: 317-637-1321 ext.315 FAX: 317-687-2344

Email address: rbrown@clarkquinnlaw.com

Preferred method of contact: EMAIL [x] PHONE [ ]

LAND USE PETITION APPLICATION

JOHNSON COUNTY DEPARTMENT OF PLANNING AND ZONING

OFFICE USE ONLY
Reviewed By:_____ Date:_____
Case Number:_____ Fee:_____
Receipt #:_____ Check #:_____
Sec:_____ Twp:_____ Range:_____
Zoning:_____
Date of Hearing:_____

Subject Property (E911 address): 4363 BITTERSWEET LN, GREENWOOD, IN 46142

Nearest Parcel Number: 41-03-34-021-073.000-038 Acreage: 0.5317

Existing Use of Property: Public ROW - property owner is Johnson County

Existing Buildings/Improvements on Property: N/A

Petitioner Name: Emily Smith - TeleCAD on behalf of Verizon Wireless Phone Number: 423-802-7707

Email Address: matt.bates@telecadeng.com

Petitioner's Home Address: 1961 Northpoint Blvd, Suite 130

Nearest Property Owner Name (if different from petitioner): Eaton, David

Nearest Property Owner Address (if different from petitioner): 4359 Bittersweet Ln

This is nearest property but our proposal is located within the Public ROW.

Land Use Request (check all that apply):

- ☐ Variance of Use
- ☐ Variance of Development Standards
- ☐ Other (describe)_____
- ☐ Rezoning
- ☒ Special Exception

Describe Land Use Request (attach additional pages if necessary):

Installing new VZW owned black metal pole with light, with two antennas, pole mounted cabinet and meter in ROW of Bittersweet Ln.

The above information and attached exhibits, to my knowledge and belief, are true and correct.

STEPHEN E. HUNT STATE OF TENNESSEE NOTARY PUBLIC HAMILTON TENNESSEE

State of Tennessee)
County of Hamilton) SS:
)

Subscribed and sworn to before me this 16th day of February, 2022

My commission expires: 8/21/22

County of Residence: Hamilton

Signature of Petitioner

Emily N Smith - Telecad Wireless - on behalf of Verizon Wireless

STEPHEN E. HUNT

Notary Public

PROJECT SUMMARY

SITE NAME:	GN INDY 1235
SITE ADDRESS: (E-911 VERIFIED)	4363 BITTERSWEET LN GREENWOOD, IN 46142
COUNTY:	JOHNSON
JURISDICTION:	GREENWOOD
SITE COORDINATES:	1A
LATITUDE:	39° 37' 7.284" N (NAD 83)
LATITUDE:	39.61869°
LONGITUDE:	86° 11' 15.216" W (NAD 83)
LONGITUDE:	-86.18756°
ELEVATION:	±716'-9" (NAVD 88)
PROPERTY DEFINITION:	R.O.W.
FUZE PROJECT ID:	16042319
PSLC CODE:	604939
EXISTING POLE HEIGHT:	N/A
PROPOSED POLE HEIGHT:	43'-0"
PROPOSED POLE CLASS:	N/A
HIGHEST APPURTENANCE:	43'-0"
STRUCTURE OWNER:	VERIZON
STRUCTURE TYPE:	NEW METAL (BLACK RAL9004) MODEL: 178 LIGHT
ENVIRONMENTAL REQ. :	N/A

PROJECT DESCRIPTION

THESE DRAWINGS DEPICT A PORTION OF A PROPOSED SMALL CELL NETWORK BUILD INVOLVING INSTALLATION OF A NEW METAL (BLACK RAL9004) MODEL: 178 VERIZON OWNED LIGHT POLE, SETTING AN ANTENNA (OR ANTENNAS) ATOP THE POLE AND INSTALLING POLE MOUNTED EQUIPMENT ON THE POLE.

STRUCTURAL REVIEW

STRUCTURAL ANALYSIS PERFORMED BY OTHERS.

verizon

SITE NAME: GN INDY 1235

4363 BITTERSWEET LN
GREENWOOD, IN 46142

VICINITY MAP

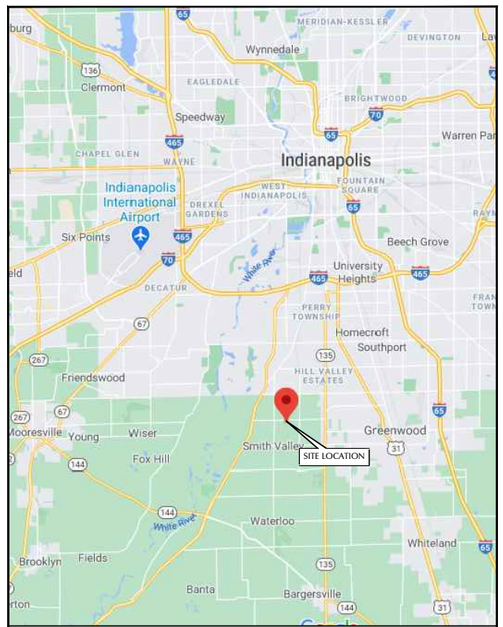

NOT TO SCALE

LOCATION MAP

NOT TO SCALE

SHEET SCALE FACTOR:

PLOT SIZE:
11" x 17": TO SCALE

CONTACT 811 BEFORE YOU DIG
811
SAFE DIGGING PARTNER

1 (800) 382-5544
www.indiana811.com

CONTRACTOR TO CALL INDIANA ONE-CALL SYSTEMS AT LEAST (2) WORKING DAYS PRIOR TO DIGGING.

SHEET INDEX

NO.	DESCRIPTION
T1	TITLE SHEET
GN1	GENERAL NOTES
C1	SITE LAYOUTS
C1A	SITE LAYOUT - AERIAL IMAGERY
C2	POLE ELEVATION
C3	ANTENNA LAYOUT
C4	SITE DETAILS
C5	SITE DETAILS
C6	EQUIPMENT DETAILS
E1	UTILITY SITE PLAN
E2	ELECTRICAL DETAILS
E3	SINGLE LINE DIAGRAM
S1	FOUNDATION DESIGN
S2	FOUNDATION DESIGN
S3	FOUNDATION DESIGN
S4	FOUNDATION DESIGN

SCOPE OF WORK

- INSTALLING NEW METAL (BLACK RAL9004) MODEL: 178 LIGHT POLE
- INSTALLING EQUIPMENT
  - POLE MOUNTED FIBER CABINET
  - (2) ERICSSON ANTENNAS
  - (1) FIBER & (1) POWER CABLE PER ANTENNA
  - POWER METER & DISCONNECT
- RUN CONDUITS FOR POWER AND FIBER

STATE COUNTY MAP

INDIANA

PREPARED FOR:

verizon

PREPARED BY:

TeleCAD Wireless

1961 NORTHPOINT BLVD, SUITE 130
HIXSON, TN 37343
PH: 423-843-9500
FAX: 423-843-9509

DRAWING NOTICE:
THE INFORMATION CONTAINED IN THIS SET OF DOCUMENTS IS PROPRIETARY BY NATURE. ANY USE OR DISCLOSURE OTHER THAN THAT WHICH RELATES TO THE CLIENT IS STRICTLY PROHIBITED.

DRAWN BY:	TMR
CHECKED BY:	CTD

REVISIONS

NO.	DATE	BY	DESCRIPTION
0	10/21/21	AJD	CONSTRUCTION ISSUE
C	07/16/21	KR	PRELIMINARY REVIEW
B	03/23/21	BRP	PRELIMINARY REVIEW
A	03/25/20	TMR	PRELIMINARY REVIEW

ENGINEER'S STAMP:

STEPHEN E. HUNT
REGISTERED
PE10809854
STATE OF INDIANA
PROFESSIONAL ENGINEER
10/21/21

NOT VALID WITHOUT P.E. STAMP & SIGNATURE

SITE NAME:	GN INDY 1235
ADDRESS:	4363 BITTERSWEET LN GREENWOOD, IN 46142
COUNTY:	JOHNSON
LATITUDE:	39° 37' 7.284" N
LONGITUDE:	86° 11' 15.216" W
DESIGN TYPE:	RAWLAND
SHEET TITLE:	TITLE SHEET
DRAWING NO.	T1
REVISION:	0

GENERAL NOTES

1. THESE NOTES SHALL BE CONSIDERED A PART OF THE WRITTEN SPECIFICATIONS.
2. THE WORK SHALL INCLUDE FURNISHING MATERIALS, EQUIPMENT, APPURTENANCES AND LABOR NECESSARY TO COMPLETE ALL INSTALLATIONS AS INDICATED IN THE CONTRACT DOCUMENTS.
3. PRIOR TO THE SUBMISSION OF BIDS, THE CONTRACTOR(S) SHALL VISIT THE JOB SITE(S) AND BE RESPONSIBLE FOR ALL CONTRACT DOCUMENTS,FIELD CONDITIONS AND DIMENSIONS AND CONFIRMING THAT THE WORK MAY BE ACCOMPLISHED PER THE CONTRACT DOCUMENTS. ANY DISCREPANCIES ARE TO BE BROUGHT TO THE ATTENTION OF THE IMPLEMENTATION ENGINEER AND ARCHITECT/ENGINEER.
4. THE CONTRACTOR SHALL RECEIVE WRITTEN AUTHORIZATION TO PROCEED ON ANY WORK NOT CLEARLY DEFINED OR IDENTIFIED IN THE CONSTRUCTION DOCUMENTS BEFORE STARTING ANY WORK.
5. ALL WORK PERFORMED AND MATERIALS INSTALLED SHALL BE IN STRICT ACCORDANCE WITH ALL APPLICABLE CODES, REGULATIONS AND ORDINANCES INCLUDING APPLICABLE MUNICIPAL AND UTILITY COMPANY SPECIFICATIONS.
6. THE CONTRACTOR SHALL INSTALL ALL EQUIPMENT AND MATERIALS IN ACCORDANCE WITH THE MANUFACTURER RECOMMENDATIONS. IF THESE RECOMMENDATIONS ARE IN CONFLICT WITH THE CONTRACT DOCUMENTS AND/OR APPLICABLE CODES OR REGULATIONS, REVIEW THE CONFLICT FOR DIRECTION WITH THE IMPLEMENTATION ENGINEER AND ARCHITECT/ENGINEER PRIOR TO PROCEEDING.
7. THE CONTRACTOR SHALL BE SOLELY RESPONSIBLE FOR ALL CONSTRUCTION MEANS, METHODS, TECHNIQUES, SEQUENCES, PROCEDURES AND FOR COORDINATION OF ALL PORTIONS OF THE WORK UNDER THE CONTRACT INCLUDING CONTACT AND COORDINATION WITH THE IMPLEMENTATION TEAM AND WITH THE AUTHORIZED REPRESENTATIVE OF ANY OUTSIDE POLE OR PROPERTY OWNER. (BASE COMMANDER OR AUTHORIZED AGENT)
8. THE CONTRACTOR SHALL MAKE NECESSARY PROVISIONS TO PROTECT EXISTING IMPROVEMENTS, PAVING, CURBS, VEGETATION, GALVANIZED SURFACE OR OTHER EXISTING ELEMENTS AND UPON COMPLETION OF THE WORK, REPAIR ANY DAMAGE THAT OCCURRED DURING CONSTRUCTION TO THE SATISFACTION OF EXTENT.
9. KEEP THE GENERAL AREA CLEAN, HAZARD FREE AND DISPOSE OF ALL DIRT, DEBRIS, RUBBISH AND REMOVE EQUIPMENT NOT SPECIFIED AS REMAINING ON THE PROPERTY. LEAVE PREMISES IN CLEAN CONDITION DAILY.
10. PLANS ARE INTENDED TO BE DIAGRAMMATIC ONLY AND SHOULD NOT BE SCALED UNLESS OTHERWISE NOTED. RELY ONLY ON ANNOTATED DIMENSIONS AND REQUEST INFORMATION IF ADDITIONAL DIMENSIONS ARE REQUIRED.
11. THE EXISTENCE AND LOCATION OF UTILITIES AND OTHER AGENCY'S FACILITIES ARE OBTAINED BY A SEARCH OF AVAILABLE RECORDS. OTHER FACILITIES MAY EXIST BEYOND WHAT IS NOTED. CONTRACTOR SHALL VERIFY LOCATIONS PRIOR TO START OF CONSTRUCTION AND USE EXTREME CARE AND PROTECTIVE MEASURES TO PREVENT DAMAGE TO THESE FACILITIES. CONTRACTOR IS RESPONSIBLE FOR THE PROTECTION OF UTILITIES OR OTHER AGENCY'S FACILITIES WITHIN THE LIMITS OF THE WORK, WHETHER THEY ARE IDENTIFIED IN THE CONTRACT DOCUMENTS OR NOT.
12. ALL MOUNTING HARDWARE SUCH AS BOLTS, NUTS, LAG SCREWS, CLEVIS, CONDUIT STRAPS, STAPLES, (ANYTHING EXPOSED AND CONNECTING EQUIPMENT TO THE POLE SHALL BE HOT DIPPED GALVANIZED, UNLESS OTHERWISE STATED)

DEFINITIONS

1. "TYPICAL" OR "TYP." MEANS THAT THIS ITEM IS VIRTUALLY IDENTICAL ACROSS SIMILAR CONDITIONS. "TYP." SHALL BE UNDERSTOOD TO MEAN "TYPICAL WHERE OCCURS" AND SHALL NOT BE CONSIDERED AS WITHOUT EXCEPTION OR CONSIDERATION OF SPECIFIC CONDITIONS.
2. "SIMILAR" MEANS COMPARABLE TO CHARACTERISTICS FOR CONDITION NOTED. VERIFY DIMENSIONS AND ORIENTATION ON PLAN.
3. "AS REQUIRED" MEANS AS REQUIRED BY REGULATORY REQUIREMENTS BY REFERENCED STANDARDS, BY EXISTING CONDITIONS, BY GENERALLY ACCEPTED CONSTRUCTION PRACTICE OR BY THE CONTRACT DOCUMENTS.
4. "ALIGN" MEANS ACCURATELY LOCATE FINISH FACES OF MATERIALS IN THE SAME PLANE.
5. THE TERM "VERIFY" OR "V.I.F." SHALL BE UNDERSTOOD TO MEAN VERIFY IN FIELD WITH ARCHITECT AND REQUIRES THAT THE CONTRACTOR CONFIRM INTENTION REGARDING NOTED CONDITION AND PROCEED ONLY AFTER RECEIVING DIRECTION.
6. WHERE THE WORDS "OR EQUAL" OR WORDS OF SIMILAR INTENT FOLLOW A MATERIAL SPECIFICATION, THEY SHALL BE UNDERSTOOD TO REQUIRE SIGNED APPROVAL OF ANY DEVIATION TO SAID SPECIFICATION PRIOR TO CONTRACTOR'S ORDERING OR INSTALLATION OF SUCH PROPOSED EQUAL PRODUCT.
7. FURNISH: SUPPLY ONLY, OTHERS TO INSTALL. INSTALL: ITEMS FURNISHED BY OTHERS. PROVIDE: FURNISH AND INSTALL.

PROJECT SPECIFIC NOTES

1. THIS SET IS PROVIDED TO ILLUSTRATE THE EXPECTED SCOPE OF DRAWINGS, QUALITY OF DRAWINGS AND EXTENT GRAPHIC STANDARDS. NOTES ARE FOR A&E CONTRACTOR REFERENCE TO HELP CLARIFY THE SCOPE. ADDITIONAL DRAWINGS MAY BE REQUIRED TO MEET THE REQUIREMENTS OF A GIVEN BASE. ALL EXAMPLES SHOWN ARE FOR REFERENCE ONLY AND ANY NOTES, DETAILS, CALCULATIONS OR OTHER WORK NEEDS TO BE COMPLETED OR CONFIRMED BY THE CONTRACTOR GENERATING THE DRAWINGS IN CONSTRUCTION DOCUMENTS.
2. IT IS THE RESPONSIBILITY OF THE CONTRACTOR TO DETERMINE AND ADDITIONAL DRAWINGS OR REQUIREMENTS FOR EACH BASE, INCLUDING ANY REQUIRED DESIGNATIONS IN THE TITLE BLOCK TO INDICATE THE SUBMITTAL OR PERMIT NUMBER.
3. THIS SET IS TO BE PRINTED AT 11" x 17". IT IS THE RESPONSIBILITY OF THE CONTRACTOR TO CONFIRM THIS SIZE IS ACCEPTABLE BY THE BASE AND TO PROVIDE A LARGER STANDARD SIZE IF REQUIRED.
4. IT IS THE RESPONSIBILITY OF THE GENERAL CONTRACTOR TO CONFIRM ALL WORK SHOWN IS IN COMPLIANCE WITH BASE AND FEDERAL CODES. DRAWINGS SHOWN WITHIN THIS SET ARE SAMPLES AND MAY NOT REFLECT ALL OF THE REQUIRED ELEMENTS, CLEARANCES OR OTHER ITEMS OF ASSEMBLIES NEEDED TO BE CODE COMPLIANT IN THE PARTICULAR MUNICIPALITY THE NODE IS LOCATED WITHIN.

GROUND CONSTRUCTION NOTES:

1. 120/240V POWER REQUIRED FOR 3-WIRE SERVICE.
2. GC TO REMOVE / CLEAN ALL DEBRIS, NAILS, STAPLES, OR NON-USED VERTICALS OFF THE EXISTING POLE.
3. ALL CONSTRUCTION SHALL BE IN ACCORDANCE WITH FEDERAL STANDARDS AND REGULATIONS AS WELL AS NEC.
4. CALL INDIANA ONE CALL AT LEAST 2 WORKING DAYS PRIOR TO EXCAVATING AT (800) 382-5544.
5. ALL LANDSCAPING TO BE RESTORED TO ORIGINAL CONDITION OR BETTER.
6. ALL EQUIPMENT TO BE BONDED.
7. METERING CABINET (IF INSTALLED) REQUIRES 3' CLEARANCE AT DOOR OPENING.

STANDARD GROUNDING NOTES:

1. GROUND TESTED AT 25 OHMS OR LESS.
2. 5/8" x 8' RODS, CAD WELD OR UL LISTED DIRECT BURY CLAMP BELOW GRADE.
3. #6 GROUND AND BOND WIRE.
4. MOLDING, STAPLED EVERY 1' AND AT EACH END.
5. GROUND RODS 18" FROM POLE.

STANDARD CONDUIT NOTES:

1. FOR UNDERGROUND CONDUIT AND ABOVE GRADE RISERS USE SCHEDULE 40.
2. IF DIRECTIONAL BORING PLACE 1-1/4" SDR-11 GRAY CONDUIT FOR UNDERGROUND POWER APPLICATIONS.
3. IF TRENCHING PLACE 1-1/4" PVC SCH 40 CONDUIT FOR UNDERGROUND POWER APPLICATIONS.
4. RISERS TO BE ATTACHED TO POLE WITH STANDARD STRAPS AND LAG SCREWS.
5. RISER STRAPS TO BE INSTALLED EVERY 5'.
6. CONDUIT UNDER 1" MAY BE ATTACHED WITH GROUND WIRE MOLDING STAPLES.
7. ALL CONDUIT WILL BE PROOFED WITH A MANDREL AND EQUIPPED WITH PULL ROPE OR MULE TAPE.

STANDARD TRENCHING NOTES:

1. MAINTAIN 46" MINIMUM COVER FOR ELECTRICAL CONDUIT.
2. MAINTAIN 46" MINIMUM COVER FOR COMMUNICATION CONDUIT.
3. IN STREET SLURRY TO GRADE AND MILL DOWN 1-1/2" FOR AC CAP.
4. IN DIRT SLURRY 18" FROM GRADE AND FILL WITH 95% COMPACTION NATIVE SOIL FOR BALANCE.
5. PLACE WARNING TAPE IN TRENCH 12" ABOVE ALL CONDUITS AND #18 WARNING TAPE ABOVE GROUND EQUIPMENT.

UTILITY POLE CONSTRUCTION NOTES:

1. NO BOLT THREADS TO PROTRUDE MORE THAN 1/2".
2. FILL ALL HOLES LEFT IN POLE FROM REARRANGEMENT OF CLIMBERS.
3. ALL CLIMB STEPS NEXT TO CONDUIT SHALL HAVE EXTENDED STEPS.
4. CABLE NOT TO IMPEDE 15" CLEAR SPACE OFF POLE FACE.
5. 90° SHORT SWEEP UNDER ANTENNA ARM. ALL CABLES MUST ONLY TRANSITION ON THE INSIDE OR BOTTOM OF ARMS (NO CABLE ON TOP OF ARMS).
6. USE CABLE CLAMPS TO SECURE CABLE TO ARMS; PLACE 2" CARRIER ID TAGS ON BOTH SIDE OF ARMS.
7. USE 90° CONNECTOR AT CABLE CONNECTION TO ANTENNAS.
8. USE 1/2" CABLE ON ANTENNAS UNLESS OTHERWISE SPECIFIED.
9. FILL VOID AROUND CABLES AT CONDUIT OPENING WITH FOAM SEALANT TO PREVENT WATER INTRUSION.

VERIZON WIRELESS CONSTRUCTION NOTES:

1. CONTRACTOR IS TO FOLLOW THE MOST CURRENT VZW STANDARDS DOCUMENTS PROVIDED TO COMPLETE THIS INSTALLATION.
2. CONTRACTOR SHALL COMPLETE VZW PROVIDED "SMALL CELL SWEEP REPORT" WITH ALL INFORMATION FILLED IN ACCURATELY AND COMPLETELY.
3. CONTRACTOR TO REFER TO THE MOST CURRENT VZW STANDARDS FOR APPROVED "PIM" TEST EQUIPMENT AND GUIDELINES.
4. CONTRACTOR IS TO USE BATTERY POWERED "PIM" EQUIPMENT TO VALIDATE THE FINAL LOCATION OF THE JUMPER AND ANTENNA ARE FREE OF INTERNAL AND EXTERNAL "PIM" SOURCES.
5. CONTRACTOR SHALL PROVIDE AT LEAST ONE TECHNICAL LEAD THAT IS CERTIFIED AND PROFICIENT IN EXECUTING, INTERPRETING AND RECORDING "PIM" MEASUREMENTS.

PREPARED FOR:

verizon

PREPARED BY:

TeleCAD Wireless
1961 NORTHPOINT BLVD, SUITE 130
HIXSON, TN 37343
PH: 423-843-9500
FAX: 423-843-9509

DRAWING NOTICE:
THE INFORMATION CONTAINED IN THIS SET OF DOCUMENTS IS PROPRIETARY BY NATURE. ANY USE OR DISCLOSURE OTHER THAN THAT WHICH RELATES TO THE CLIENT IS STRICTLY PROHIBITED.

DRAWN BY:	TMR
CHECKED BY:	CTD

REVISIONS

NO.	DATE	BY	DESCRIPTION
0	10/21/21	AJD	CONSTRUCTION ISSUE
C	07/16/21	KR	PRELIMINARY REVIEW
B	03/23/21	BRP	PRELIMINARY REVIEW
A	03/25/20	TMR	PRELIMINARY REVIEW

ENGINEER'S STAMP:

STEPHEN E. HUNT
REGISTERED
PE10809854
STATE OF INDIANA
PROFESSIONAL ENGINEER

10/21/21

NOT VALID WITHOUT P.E. STAMP & SIGNATURE

SITE NAME: GN INDY 1235

ADDRESS: 4363 BITTERSWEET LN
GREENWOOD, IN 46142

COUNTY: JOHNSON

LATITUDE: 39° 37' 7.284" N

LONGITUDE: 86° 11' 15.216" W

DESIGN TYPE: RAWLAND

SHEET TITLE: GENERAL NOTES

DRAWING NO.	REVISION:
GN1	0

NOTES:

1. THIS DRAWING IS BASED ON AERIAL IMAGERY AND FIELD OBSERVATIONS. CONTRACTOR SHALL FIELD VERIFY ALL EXISTING CONDITIONS PRIOR TO COMMENCEMENT OF CONSTRUCTION.
2. THE PROPOSED USE DOES NOT REQUIRE FULL OR PART TIME EMPLOYEES AT THE SITE.
3. FOR GENERAL SITE WORK NOTES, SEE SHEET GN1.
4. ALL NORTH ARROWS ON SITE PLANS ARE TRUE NORTH, UNLESS OTHERWISE SPECIFIED.
5. OPEN CUT CONSTRUCTION THROUGH EXISTING PAVEMENT, I.E. ROADWAYS, PARKING AREAS, SIDEWALKS WILL NOT BE ALLOWED. CONSTRUCTION UNDER EXISTING PAVEMENTS WILL BE REQUIRED TO BE INSTALLED WITH DIRECTIONAL BORING TECHNIQUE.

LEGEND

OVERHEAD UTILITIES	OHU	CATCH BASIN	
UNDERGROUND POWER	UGP	STREET SIGN	
OVERHEAD POWER	OHP	4 WAY STREET SIGN	
UNDERGROUND TELCO	UGT	UTILITY POLE	
OVERHEAD TELCO	OHT	LIGHT POLE	
GAS LINE	GAS	WATER VALVE	
FENCE		MANHOLE	M
WOOD FENCE		GAS VALVE	G
SEWER LINE	SWR	FIRE HYDRANT	
WATER LINE	WTR	TELCO PEDESTAL	T
HYBRID CABLE	HYB	ELECTRICAL BOX	E
HIGH VOLTAGE POWER	HVP		
FIBER	FBR		
RIGHT-OF-WAY	ROW		
PROPERTY LINE	PL		

UTILITY NOTE:

THE LOCATIONS OF EXISTING UNDERGROUND UTILITIES HAVE NOT BEEN VERIFIED. THE CONTRACTOR SHALL DETERMINE THE EXACT LOCATION OF ALL EXISTING UTILITIES BEFORE COMMENCING WORK. THE CONTRACTOR SHALL BE FULLY RESPONSIBLE FOR ANY AND ALL DAMAGES WHICH MIGHT OCCUR BY THE CONTRACTOR'S FAILURE TO EXACTLY LOCATE AND PRESERVE ANY AND ALL UNDERGROUND UTILITIES.

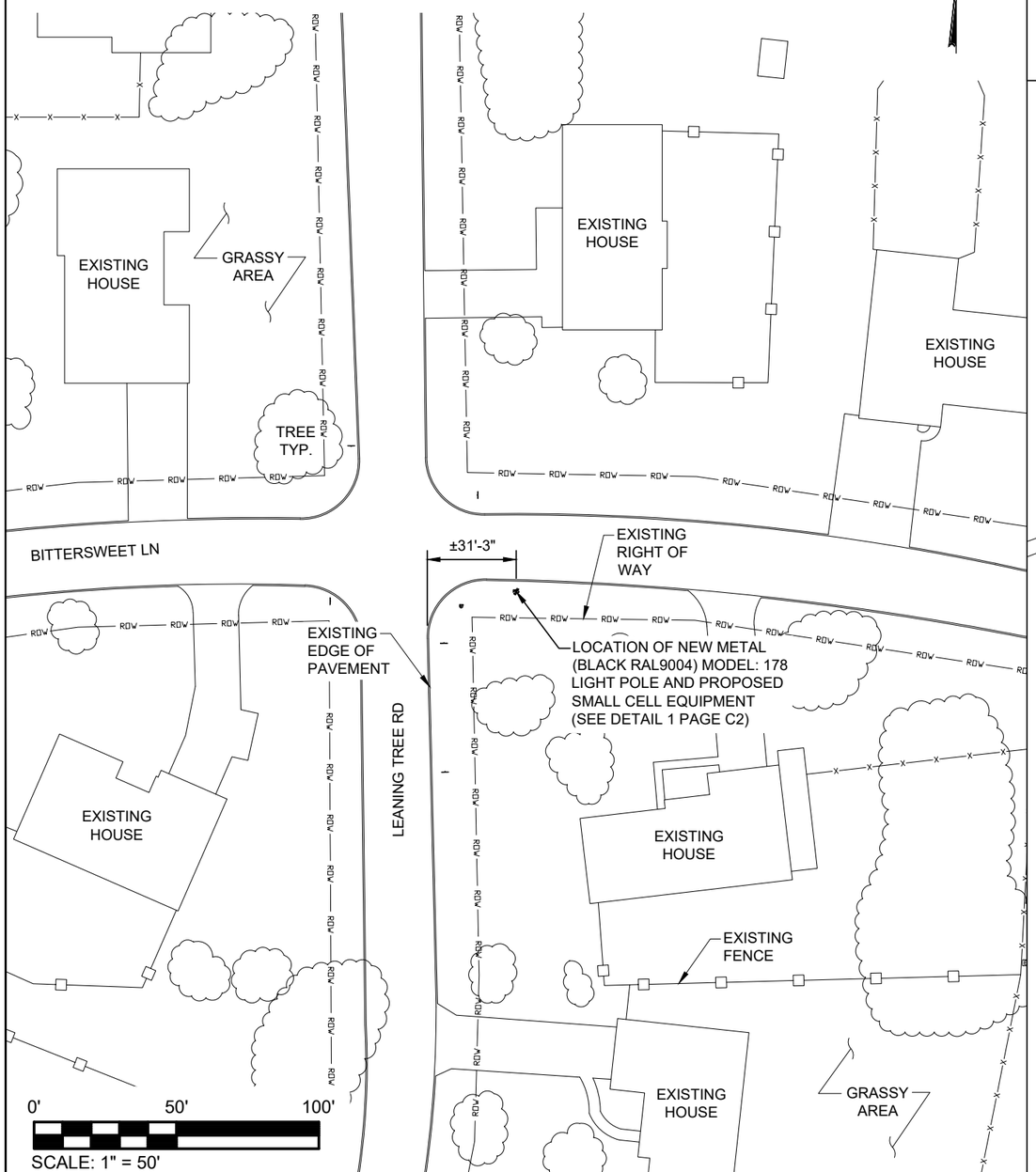

1 OVERALL SITE LAYOUT

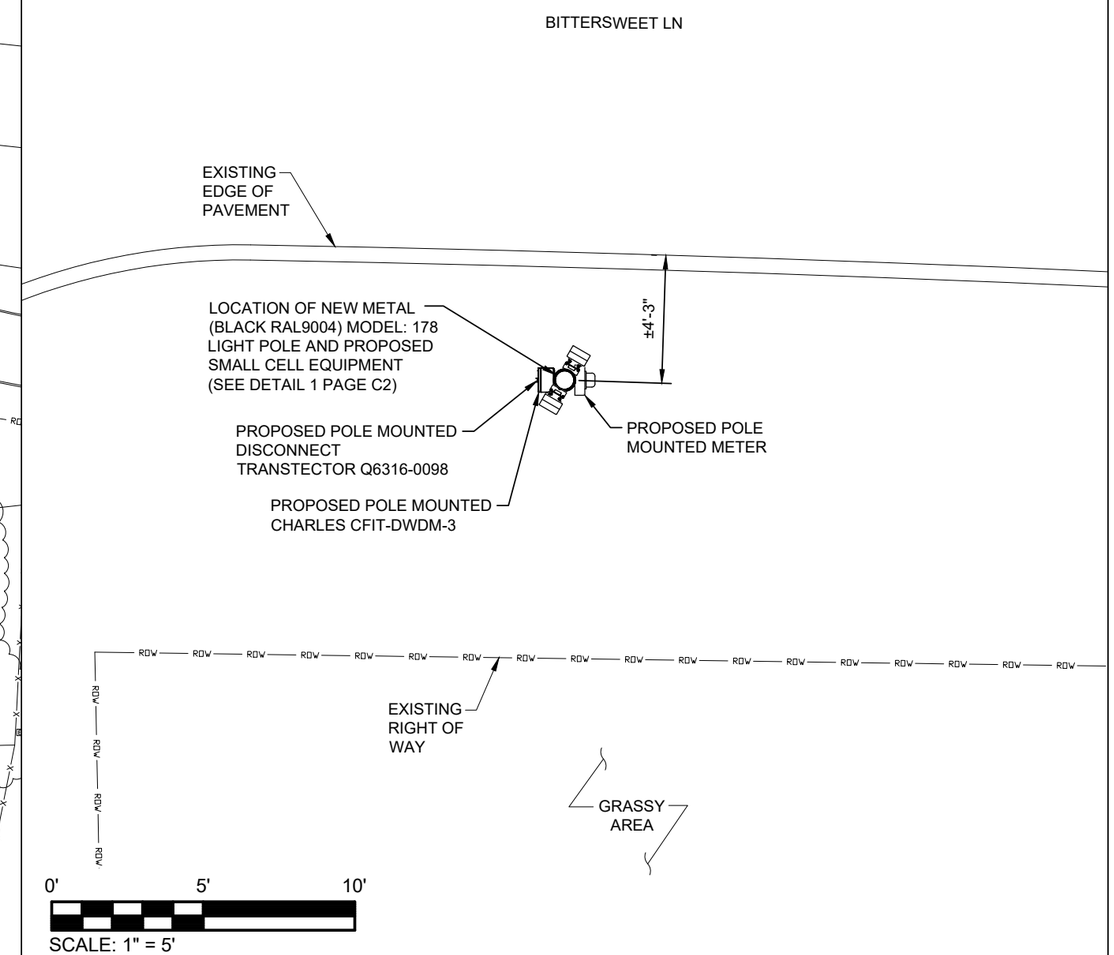

2 ENLARGED SITE LAYOUT

PREPARED FOR:

verizon

PREPARED BY:

TeleCAD Wireless

1961 NORTHPOINT BLVD, SUITE 130
HIXSON, TN 37343
PH: 423-843-9500
FAX: 423-843-9509

DRAWING NOTICE:
THE INFORMATION CONTAINED IN THIS SET OF DOCUMENTS IS PROPRIETARY BY NATURE. ANY USE OR DISCLOSURE OTHER THAN THAT WHICH RELATES TO THE CLIENT IS STRICTLY PROHIBITED.

DRAWN BY:	TMR
CHECKED BY:	CTD

REVISIONS

NO.	DATE	BY	DESCRIPTION
0	10/21/21	AJD	CONSTRUCTION ISSUE
C	07/16/21	KR	PRELIMINARY REVIEW
B	03/23/21	BRP	PRELIMINARY REVIEW
A	03/25/20	TMR	PRELIMINARY REVIEW

ENGINEER'S STAMP:

STEPHEN E. HUNT
REGISTERED
PE10809854
STATE OF INDIANA
PROFESSIONAL ENGINEER

NOT VALID WITHOUT P.E. STAMP & SIGNATURE

SITE NAME:	GN INDY 1235
ADDRESS:	4363 BITTERSWEET LN GREENWOOD, IN 46142
COUNTY:	JOHNSON
LATITUDE:	39° 37' 7.284" N
LONGITUDE:	86° 11' 15.216" W
DESIGN TYPE:	RAWLAND
SHEET TITLE:	SITE LAYOUTS
DRAWING NO.	C1
REVISION:	0

1 OVERALL SITE LAYOUT - AERIAL IMAGERY

PREPARED FOR:

verizon

PREPARED BY:

TeleCAD Wireless

1961 NORTHPOINT BLVD, SUITE 130
HIXSON, TN 37343
PH: 423-843-9500
FAX: 423-843-9509

DRAWING NOTICE:
THE INFORMATION CONTAINED IN THIS SET OF DOCUMENTS IS PROPRIETARY BY NATURE. ANY USE OR DISCLOSURE OTHER THAN THAT WHICH RELATES TO THE CLIENT IS STRICTLY PROHIBITED.

DRAWN BY:	TMR
CHECKED BY:	CTD

REVISIONS

NO.	DATE	BY	DESCRIPTION
0	10/21/21	AJD	CONSTRUCTION ISSUE
C	07/16/21	KR	PRELIMINARY REVIEW
B	03/23/21	BRP	PRELIMINARY REVIEW
A	03/25/20	TMR	PRELIMINARY REVIEW

ENGINEER'S STAMP:

STEPHEN E. HUNT
REGISTERED
PE10809854
STATE OF INDIANA
PROFESSIONAL ENGINEER

10/21/21

NOT VALID WITHOUT P.E. STAMP & SIGNATURE

SITE NAME:
GN INDY 1235

ADDRESS:
4363 BITTERSWEET LN
GREENWOOD, IN 46142

COUNTY:
JOHNSON

LATITUDE:
39° 37' 7.284" N

LONGITUDE:
86° 11' 15.216" W

DESIGN TYPE:
RAWLAND

SHEET TITLE:
SITE LAYOUT - AERIAL IMAGERY

DRAWING NO.	REVISION:
C1A	0

CONTRACTOR TO OBTAIN LATEST RFDS FROM VERIZON PRIOR TO CONSTRUCTION.

MAINTAIN A MIN. OF 3'-0" CLEARANCE BETWEEN DISCONNECT BOX AND ANY COMM LINES

40" MIN. CLEARANCE BELOW NEW TRIPLEX SERVICE

CONTRACTOR TO REINSTALL SIGNAGE AS REQUIRED.

METAL POLE PART# CHART	
POLE MANUFACTURER	COMPTEK
POLE MODEL	178
POLE COLOR	BLACK RAL9004
LIGHT MODEL	STANDARD-6
LIGHT ARM MODEL	STANDARD-6

8"x12" RF NOTICE SIGN

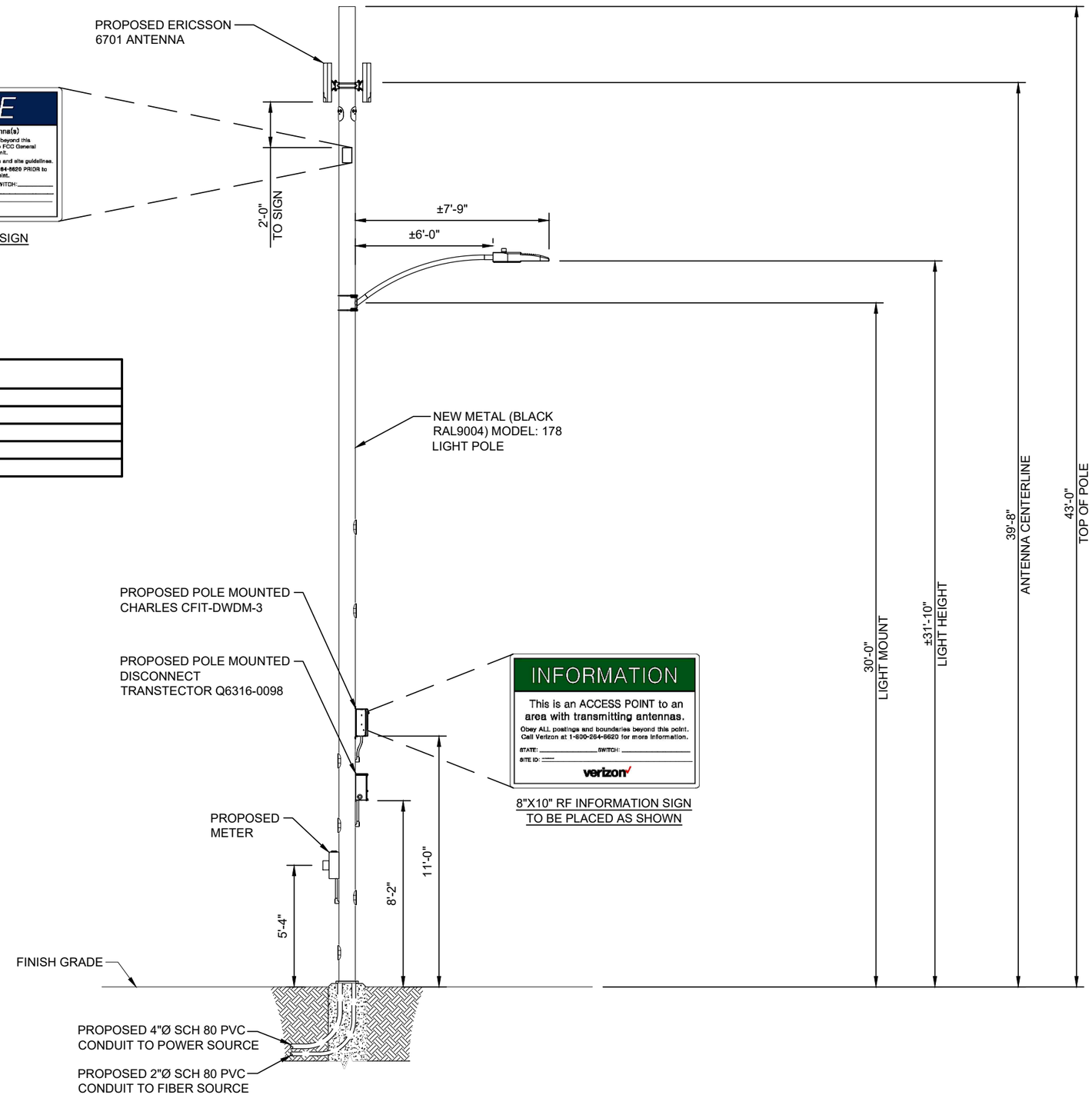

INFORMATION

This is an ACCESS POINT to an area with transmitting antennas.

Obey ALL postings and boundaries beyond this point. Call Verizon at 1-800-264-9620 for more information.

STATE: SWITCH:

SITE ID:

verizon

8"X10" RF INFORMATION SIGN TO BE PLACED AS SHOWN

CONTRACTOR TO WRAP THE ANTENNAS AND PAINT THE EQUIPMENT TO MATCH THE POLE

1 POLE ELEVATION N.T.S.

PREPARED FOR:

verizon

PREPARED BY:

TeleCAD Wireless

1961 NORTHPOINT BLVD, SUITE 130
HIXSON, TN 37343
PH: 423-843-9500
FAX: 423-843-9509

DRAWING NOTICE:

THE INFORMATION CONTAINED IN THIS SET OF DOCUMENTS IS PROPRIETARY BY NATURE. ANY USE OR DISCLOSURE OTHER THAN THAT WHICH RELATES TO THE CLIENT IS STRICTLY PROHIBITED.

DRAWN BY:	TMR
CHECKED BY:	CTD

REVISIONS

NO.	DATE	BY	DESCRIPTION
0	10/21/21	AJD	CONSTRUCTION ISSUE
C	07/16/21	KR	PRELIMINARY REVIEW
B	03/23/21	BRP	PRELIMINARY REVIEW
A	03/25/20	TMR	PRELIMINARY REVIEW

ENGINEER'S STAMP:

STEPHEN E. HUNT REGISTERED PE10809854 STATE OF INDIANA PROFESSIONAL ENGINEER

10/21/21

NOT VALID WITHOUT P.E. STAMP & SIGNATURE

SITE NAME: GN INDY 1235

ADDRESS: 4363 BITTERSWEET LN GREENWOOD, IN 46142

COUNTY: JOHNSON

LATITUDE: 39° 37' 7.284" N

LONGITUDE: 86° 11' 15.216" W

DESIGN TYPE: RAWLAND

SHEET TITLE: POLE ELEVATION

DRAWING NO.	REVISION:
C2	0

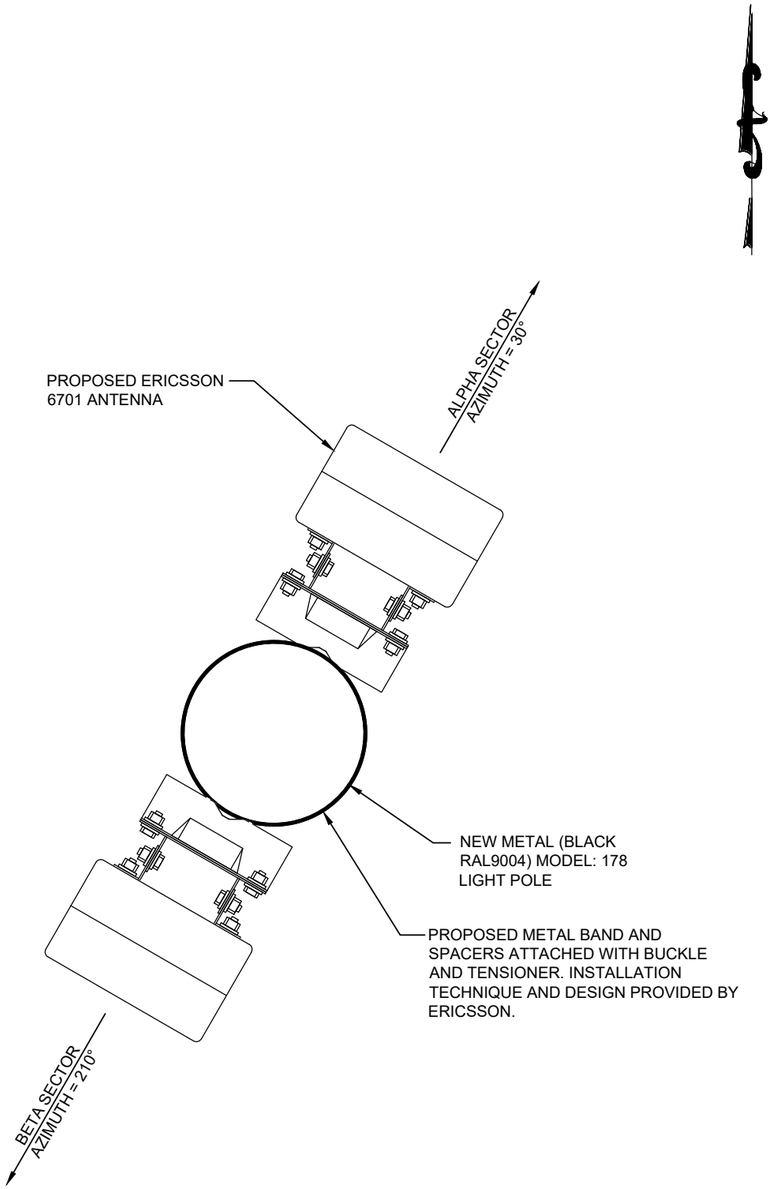

AZIMUTHS ARE SUBJECT TO CHANGE. CONTRACTOR TO VERIFY AZIMUTHS FROM FINAL RFDS FROM VERIZON. ANTENNA MOUNT TO BE SUPPLIED AND INSTALLED BY ERICSSON.

1 ANTENNA LAYOUT PLAN N.T.S.

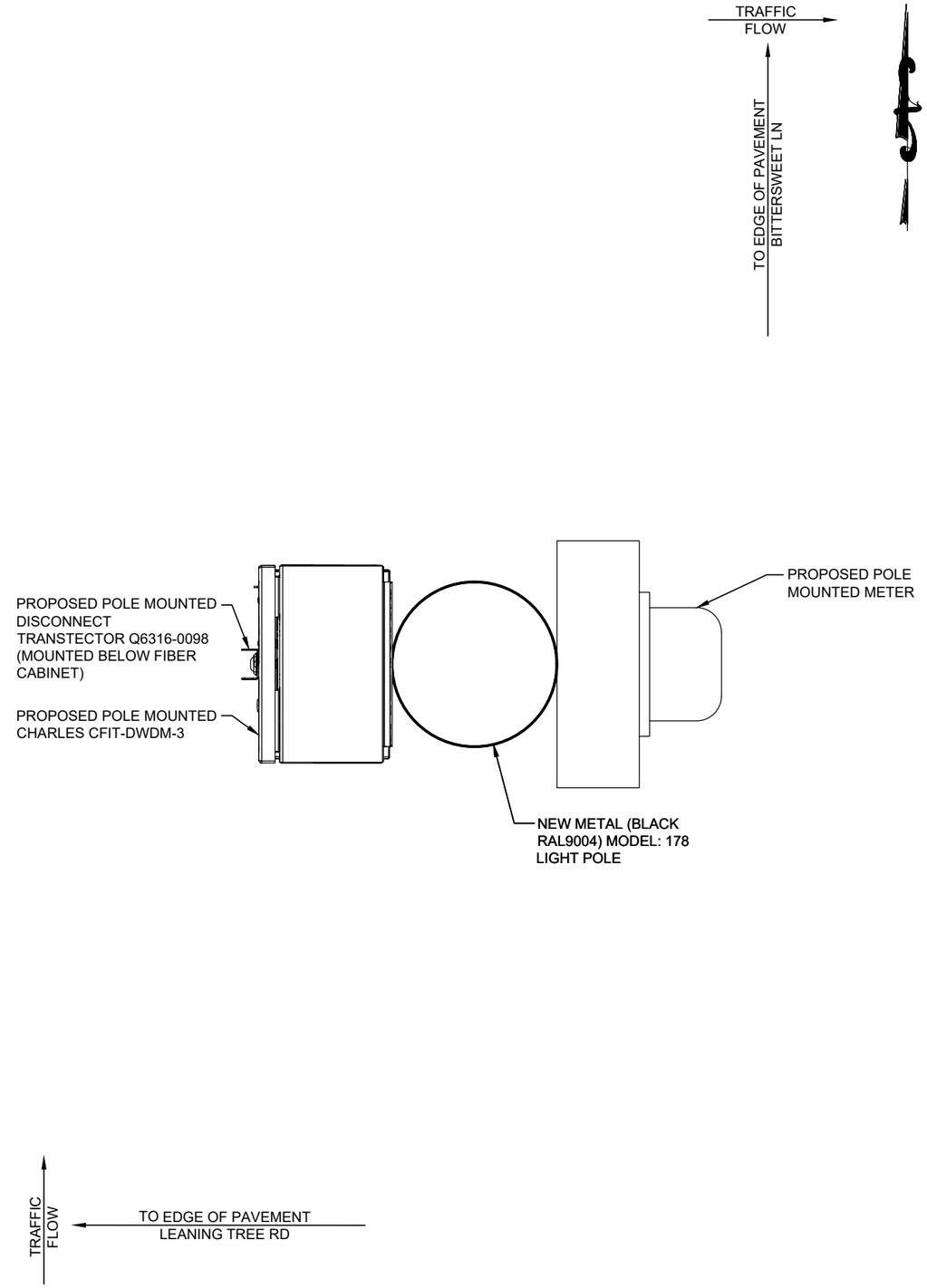

2 POLE MOUNTED EQUIPMENT LAYOUT PLAN N.T.S.

PREPARED FOR:

verizon

PREPARED BY:

TeleCAD Wireless

1961 NORTHPOINT BLVD, SUITE 130
HIXSON, TN 37343
PH: 423-843-9500
FAX: 423-843-9509

DRAWING NOTICE:
THE INFORMATION CONTAINED IN THIS SET OF DOCUMENTS IS PROPRIETARY BY NATURE. ANY USE OR DISCLOSURE OTHER THAN THAT WHICH RELATES TO THE CLIENT IS STRICTLY PROHIBITED.

DRAWN BY:	TMR
CHECKED BY:	CTD

REVISIONS

NO.	DATE	BY	DESCRIPTION
0	10/21/21	AJD	CONSTRUCTION ISSUE
C	07/16/21	KR	PRELIMINARY REVIEW
B	03/23/21	BRP	PRELIMINARY REVIEW
A	03/25/20	TMR	PRELIMINARY REVIEW

ENGINEER'S STAMP:

STEPHEN E. HUNT
REGISTERED
PE10809854
STATE OF
INDIANA
PROFESSIONAL ENGINEER

10/21/21

NOT VALID WITHOUT P.E. STAMP & SIGNATURE

SITE NAME: GN INDY 1235

ADDRESS: 4363 BITTERSWEET LN
GREENWOOD, IN 46142

COUNTY: JOHNSON

LATITUDE: 39° 37' 7.284" N

LONGITUDE: 86° 11' 15.216" W

DESIGN TYPE: RAWLAND

SHEET TITLE: ANTENNA LAYOUT

DRAWING NO.	REVISION:
C3	0

POLE ATTACHED EQUIPMENT

EQUIPMENT	VOLUME (CU-FT)
ERICSSON 6701 ANTENNA	0.46
ERICSSON 6701 ANTENNA	0.46
TOTAL IN CU-FT	0.92

1 EQUIPMENT CU-FT. TABLE

N.T.S.

PREPARED FOR:

verizon

PREPARED BY:

TeleCAD Wireless
1961 NORTHPOINT BLVD, SUITE 130
HIXSON, TN 37343
PH: 423-843-9500
FAX: 423-843-9509

DRAWING NOTICE:
THE INFORMATION CONTAINED IN THIS SET OF DOCUMENTS IS PROPRIETARY BY NATURE. ANY USE OR DISCLOSURE OTHER THAN THAT WHICH RELATES TO THE CLIENT IS STRICTLY PROHIBITED.

DRAWN BY:	TMR
CHECKED BY:	CTD

REVISIONS

NO.	DATE	BY	DESCRIPTION
0	10/21/21	AJD	CONSTRUCTION ISSUE
C	07/16/21	KR	PRELIMINARY REVIEW
B	03/23/21	BRP	PRELIMINARY REVIEW
A	03/25/20	TMR	PRELIMINARY REVIEW

ENGINEER'S STAMP:

STEPHEN E. HUNT
REGISTERED
PE10809854
STATE OF INDIANA
PROFESSIONAL ENGINEER

10/21/21

NOT VALID WITHOUT P.E. STAMP & SIGNATURE

SITE NAME:
GN INDY 1235

ADDRESS:
4363 BITTERSWEET LN
GREENWOOD, IN 46142

COUNTY:
JOHNSON

LATITUDE:
39° 37' 7.284" N

LONGITUDE:
86° 11' 15.216" W

DESIGN TYPE:
RAWLAND

SHEET TITLE:
SITE DETAILS

DRAWING NO.	REVISION:
C4	0

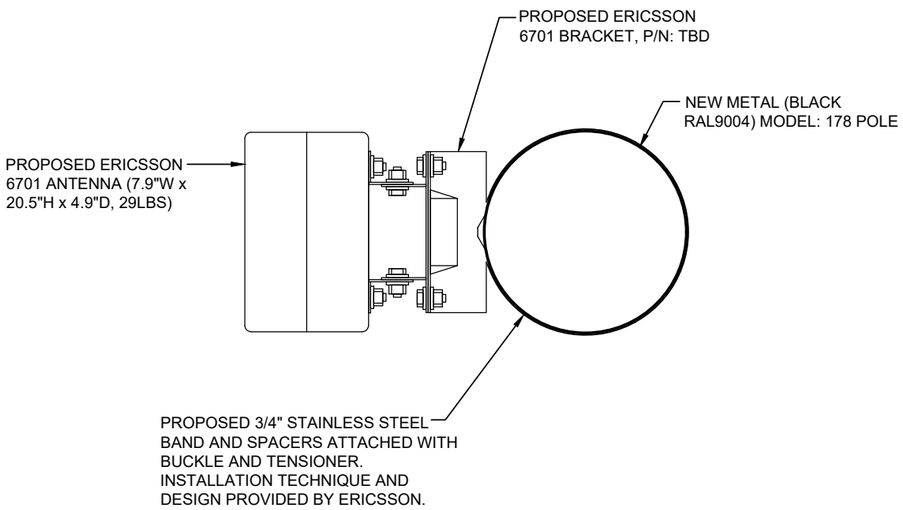

SECTION A-A
(ANTENNA MOUNTING BRACKET)

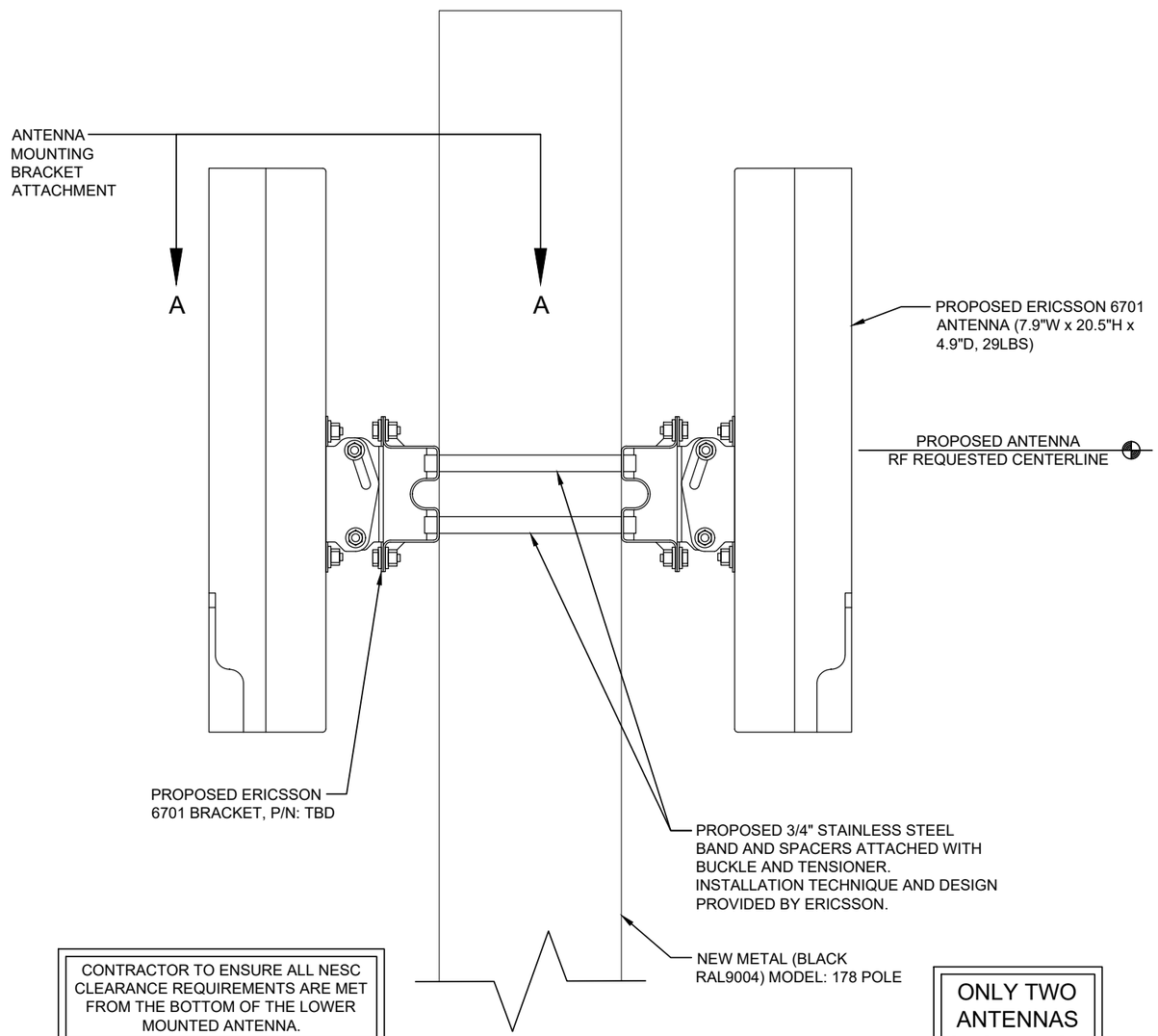

CONTRACTOR TO ENSURE ALL NESC CLEARANCE REQUIREMENTS ARE MET FROM THE BOTTOM OF THE LOWER MOUNTED ANTENNA.

ELEVATION

ONLY TWO ANTENNAS SHOWN FOR CLARITY

1 ERICSSON 6701 ANTENNA MOUNTING DETAIL N.T.S.

PREPARED FOR:

verizon

PREPARED BY:

TeleCAD Wireless

1961 NORTHPOINT BLVD, SUITE 130
HIXSON, TN 37343
PH: 423-843-9500
FAX: 423-843-9509

DRAWING NOTICE:
THE INFORMATION CONTAINED IN THIS SET OF DOCUMENTS IS PROPRIETARY BY NATURE. ANY USE OR DISCLOSURE OTHER THAN THAT WHICH RELATES TO THE CLIENT IS STRICTLY PROHIBITED.

DRAWN BY:	TMR
CHECKED BY:	CTD

REVISIONS

NO.	DATE	BY	DESCRIPTION
0	10/21/21	AJD	CONSTRUCTION ISSUE
C	07/16/21	KR	PRELIMINARY REVIEW
B	03/23/21	BRP	PRELIMINARY REVIEW
A	03/25/20	TMR	PRELIMINARY REVIEW

ENGINEER'S STAMP:

STEPHEN E. HUNT
REGISTERED
PE10809854
STATE OF INDIANA
PROFESSIONAL ENGINEER

NOT VALID WITHOUT P.E. STAMP & SIGNATURE

SITE NAME: GN INDY 1235

ADDRESS: 4363 BITTERSWEET LN
GREENWOOD, IN 46142

COUNTY: JOHNSON

LATITUDE: 39° 37' 7.284" N

LONGITUDE: 86° 11' 15.216" W

DESIGN TYPE: RAWLAND

SHEET TITLE: SITE DETAILS

DRAWING NO.	REVISION:
C5	0

Technical Data

Description	Value
Frequency	N261 (27.5–28.35 GHz)
Number of carriers	Config mode 2: Up to 8 Config mode 1: Up to 16
Operating bandwidth	Config mode 2: 800 MHz Config mode 1: 1600 MHz
Component carrier bandwidth	50MHz, 100 MHz
EIRP(1)	Config mode 2: 53 dBm per RF beam in boresight , 56 dBm per radio Config mode 1: 47 dBm per RF beam in boresight , 53 dBm per radio
$EIS_{REFSENS_50M}$	Config mode 2: -109 dBm Config mode 1: -106 dBm

(1) The MaxTxPower can be configured up to 10 dB lower than the stated EIRP without product performance being degraded. If the MaxTxPower is configured lower than the given power limit here, significant performance degradation will occur.

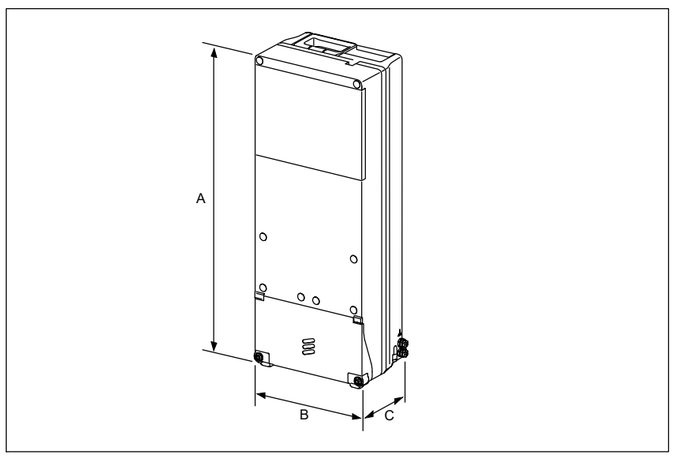

Dimensions, Weight, and Color

Dimensions	
Height (A)	511 mm
Width (B)	200 mm
Depth (C)	125 mm
Weight	14 kg
Color	Gray Reference number: NCS S 1002-B

1 ERICSSON 6701 ANTENNA N.T.S.

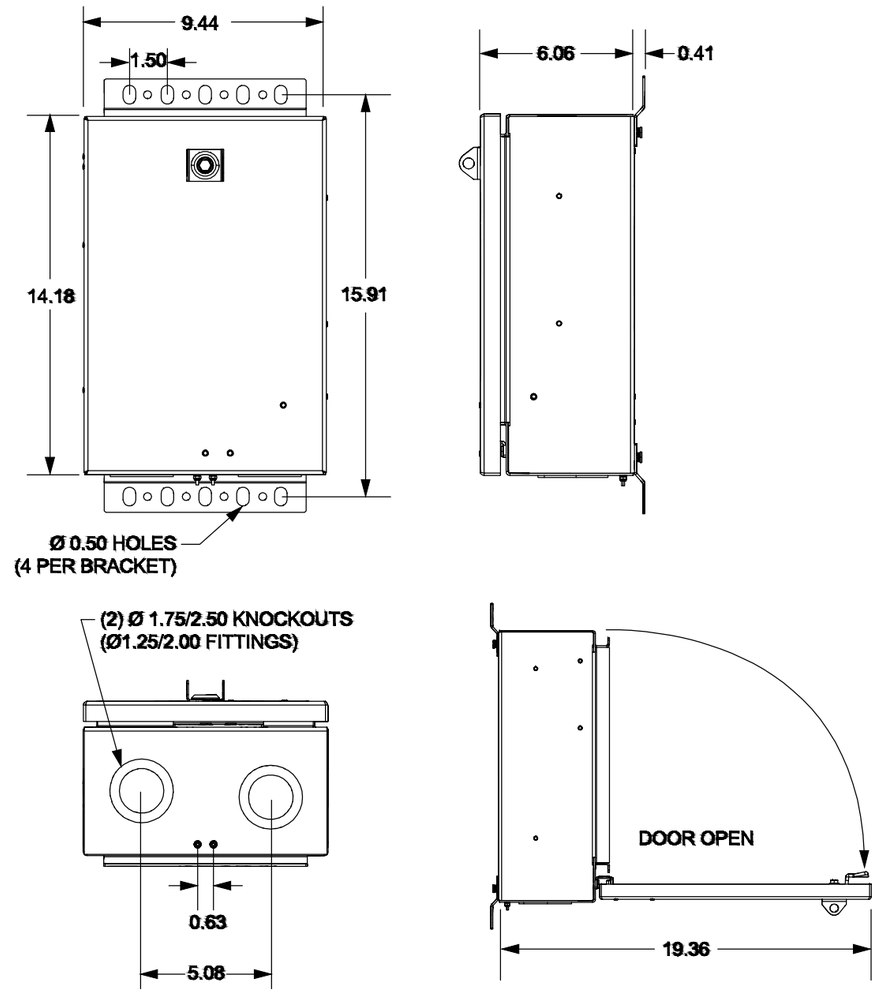

SPECIFICATIONS

Physical	
Dimensions and Weight	14”Hx9”Wx6”D, Approx. 12 lbs. as shipped
Materials	0.090” aluminum
Color	Off-white
Environmental	
Operating Temp. Range, Outside Enclosure	-40° to +115°F, -40° to 46°C
Operating Temp Range, Inside Enclosure	-40° to +149°F, -40° to 65°C
Humidity	0 to 95% (non-condensing)
Altitude	Up to 2,000 meters (6560 feet)
Kits and Replacement Parts	
Touch-up Paint	02-000290-0
216 Type Security Tool	07-002070-0
1/4 Turn Latch with Padlock Hasp	39-000449-0
12 Port LC/UPC Slide-in Module	97-12PPLCU-WDM
CFIT-DWDM part number when unit is to being factory installed into the CNUB	96-000010-A
Ordering number when CFIT is to be installed on a pole or wall	CFIT-DWDM-3

2 CHARLES UNIVERSAL BROADBAND ENCLOSURE N.T.S.

PREPARED FOR:

verizon

PREPARED BY:

TeleCAD Wireless
1961 NORTHPOINT BLVD, SUITE 130
HIXSON, TN 37343
PH: 423-843-9500
FAX: 423-843-9509

DRAWING NOTICE:
THE INFORMATION CONTAINED IN THIS SET OF DOCUMENTS IS PROPRIETARY BY NATURE. ANY USE OR DISCLOSURE OTHER THAN THAT WHICH RELATES TO THE CLIENT IS STRICTLY PROHIBITED.

DRAWN BY:	TMR
CHECKED BY:	CTD

REVISIONS

NO.	DATE	BY	DESCRIPTION
0	10/21/21	AJD	CONSTRUCTION ISSUE
C	07/16/21	KR	PRELIMINARY REVIEW
B	03/23/21	BRP	PRELIMINARY REVIEW
A	03/25/20	TMR	PRELIMINARY REVIEW

ENGINEER'S STAMP:

STEPHEN E. HUNT
REGISTERED
PE10809854
STATE OF INDIANA
PROFESSIONAL ENGINEER
10/21/21

NOT VALID WITHOUT P.E. STAMP & SIGNATURE

SITE NAME: GN INDY 1235

ADDRESS: 4363 BITTERSWEET LN
GREENWOOD, IN 46142

COUNTY: JOHNSON

LATITUDE: 39° 37' 7.284" N

LONGITUDE: 86° 11' 15.216" W

DESIGN TYPE: RAWLAND

SHEET TITLE: EQUIPMENT DETAILS

DRAWING NO.	REVISION:
C6	0

ELECTRICAL NOTES:

1. PROVIDE AND INSTALL WARNING TAPE FOR ELECTRIC SERVICE CONDUIT 12" BELOW GRADE.
2. CONTRACTOR TO PAY FOR THE SERVICE AS DIRECTED BY THE MUNICIPALITY.
3. CONTRACTOR TO USE RIGID METAL CONDUIT WHERE CONDUITS CROSS ACCESS ROADS. CONTRACTOR TO BOND RGS CONDUIT WITH GROUNDING CLAMP TO THE GROUND RADIAL IN TRENCH IF REQUIRED.
4. CONTRACTOR SHALL COORDINATE WITH ELECTRIC AND TELEPHONE UTILITY COMPANIES FOR SERVICES.
5. CONTRACTOR TO PAY ALL FEES FOR SERVICES REQUIRED.
6. CONTRACTOR TO BE ADVISED THAT EXISTING UNDERGROUND CONDUITS, GROUND CABLES EXIST. DIG WITH CAUTION.
7. CONTRACTOR TO VERIFY POWER AND TELCO LB LOCATIONS AND FLEX CONDUIT SIZE AND ROUTING TO THE EQUIPMENT WITH MANUFACTURER'S DRAWINGS.
8. OPEN CUT CONSTRUCTION THROUGH EXISTING PAVEMENT, I.E. ROADWAYS, PARKING AREAS, SIDEWALKS WILL NOT BE ALLOWED. CONSTRUCTION UNDER EXISTING PAVEMENTS WILL BE REQUIRED TO BE INSTALLED WITH DIRECTIONAL BORING TECHNIQUE.

UTILITY NOTES:

1. ALL POWER CONDUITS ABOVE GRADE, SWEEPS, & ELBOWS TO BE RIGID GALVANIZED STEEL CONDUIT UNLESS OTHERWISE SPECIFIED.
2. INSTALL PULL STRING IN TELCO CONDUIT.

STANDARD POWER SUPPLY FOR THE SMALL CELL NODES IS A 100 AMP 120 VOLT SINGLE PHASE SERVICE

SERVICE CONDUCTOR MAXIMUM DISTANCE CHART
(BASED ON 80 AMP MAX. CONTINUOUS LOAD)

WIRE SIZE	ALUMINUM	COPPER	CONDUIT SIZE
	120V	120V	
3 AWG	55'	90'	1" MIN
2 AWG	70'	115'	1 1/4" MIN
1 AWG	85'	145'	1 1/4" MIN
1/0 AWG	110'	180'	1 1/2" MIN
2/0 AWG	140'	230'	1 1/2" MIN
3/0 AWG	175'	290'	2" MIN
4/0 AWG	220'	365'	2" MIN
250 KCMIL	265'	435'	2" MIN
300 KCMIL	315'	520'	2 1/2" MIN
350 KCMIL	370'	610'	2 1/2" MIN
400 KCMIL	420'	695'	2 1/2" MIN
500 KCMIL	530'	870'	3" MIN

LEGEND

OVERHEAD UTILITIES — OHU
UNDERGROUND POWER — UGP
OVERHEAD POWER — OHP
UNDERGROUND TELCO — UGT
OVERHEAD TELCO — OHT
GAS LINE — GAS
FENCE — X
WOOD FENCE
SEWER LINE — SWR
WATER LINE — WTR
STORM WATER — SW
HIGH VOLTAGE POWER — HVP
FIBER — FBR
RIGHT-OF-WAY — ROW
PROPERTY LINE — PL

CATCH BASIN
STREET SIGN
4 WAY STREET SIGN
UTILITY POLE
LIGHT POLE
TRAFFIC LIGHT POLE
WATER VALVE
MANHOLE
GAS VALVE
FIRE HYDRANT
TELCO PEDESTAL
ELECTRICAL BOX

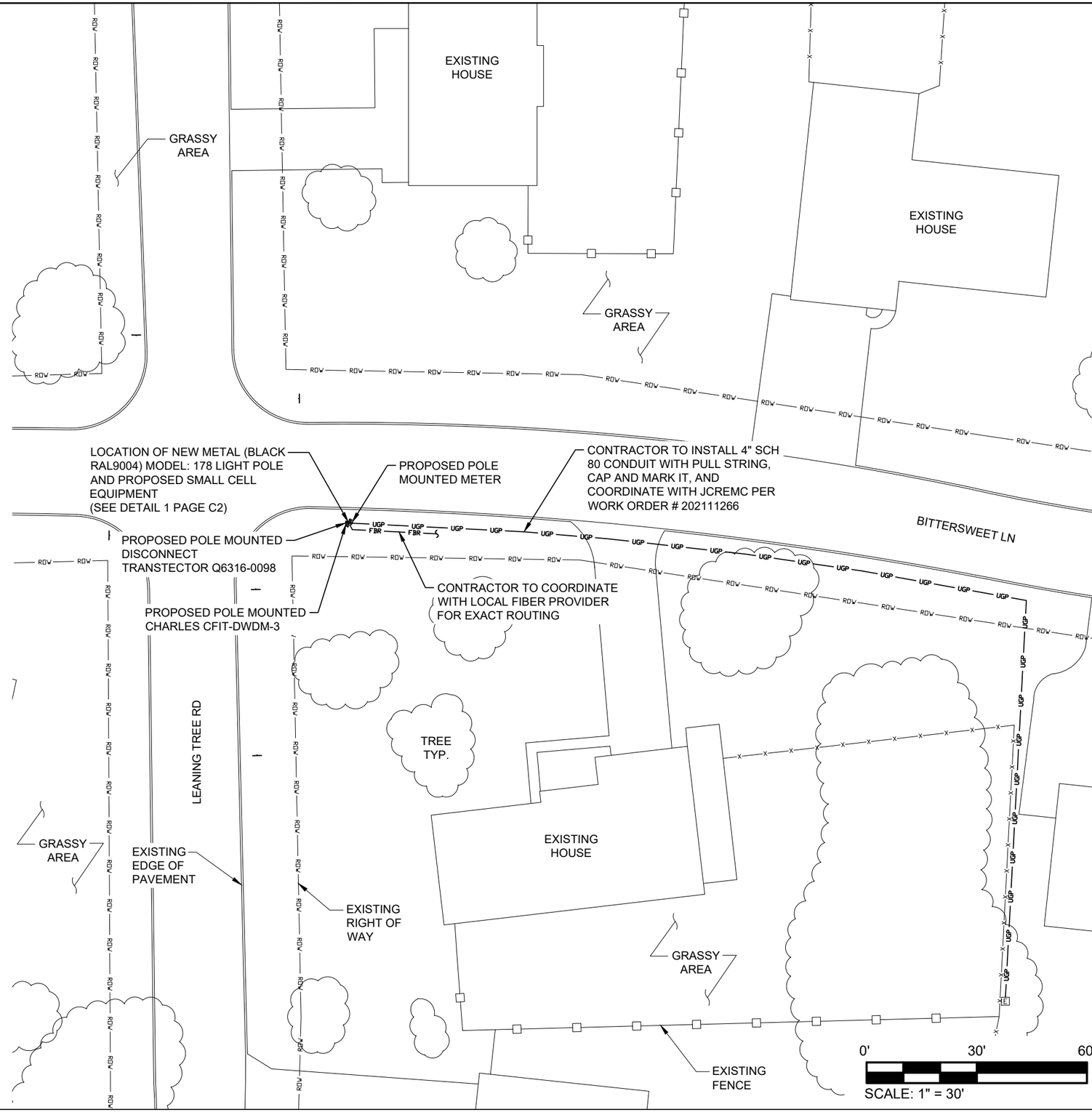

1 UTILITY SITE PLAN

PREPARED FOR:

verizon

PREPARED BY:

TeleCAD Wireless
1961 NORTHPOINT BLVD, SUITE 130
HIXSON, TN 37343
PH: 423-843-9500
FAX: 423-843-9509

DRAWING NOTICE:
THE INFORMATION CONTAINED IN THIS SET OF DOCUMENTS IS PROPRIETARY BY NATURE. ANY USE OR DISCLOSURE OTHER THAN THAT WHICH RELATES TO THE CLIENT IS STRICTLY PROHIBITED.

DRAWN BY:	TMR
CHECKED BY:	CTD

REVISIONS

NO.	DATE	BY	DESCRIPTION
0	10/21/21	AJD	CONSTRUCTION ISSUE
C	07/16/21	KR	PRELIMINARY REVIEW
B	03/23/21	BRP	PRELIMINARY REVIEW
A	03/25/20	TMR	PRELIMINARY REVIEW

ENGINEER'S STAMP:
STEPHEN E. HUNT
REGISTERED
PE10809854
STATE OF INDIANA
PROFESSIONAL ENGINEER
10/21/21

NOT VALID WITHOUT P.E. STAMP & SIGNATURE

SITE NAME: GN INDY 1235
ADDRESS: 4363 BITTERSWEET LN GREENWOOD, IN 46142
COUNTY: JOHNSON
LATITUDE: 39° 37' 7.284" N
LONGITUDE: 86° 11' 15.216" W
DESIGN TYPE: RAWLAND

SHEET TITLE: UTILITY SITE PLAN

DRAWING NO.	REVISION:
E1	0

UTILITY NOTE:
1. ALL POWER CONDUITS ABOVE GRADE TO BE RIGID GALVANIZED STEEL CONDUIT.

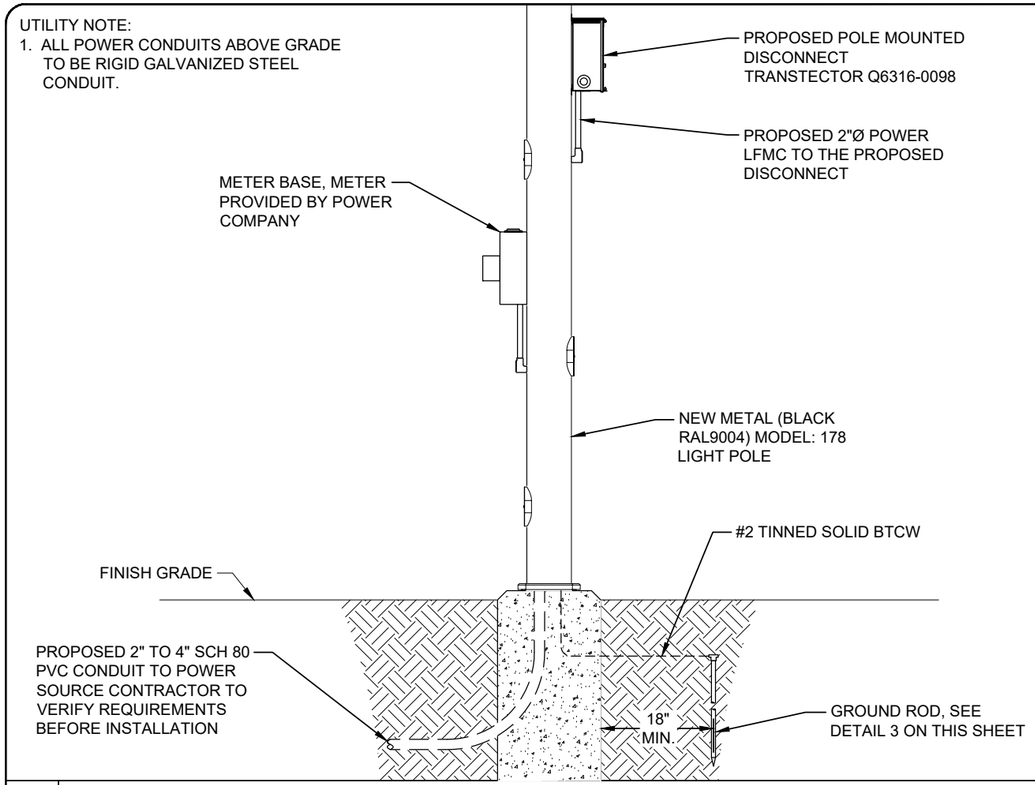

1 METER DETAIL N.T.S.

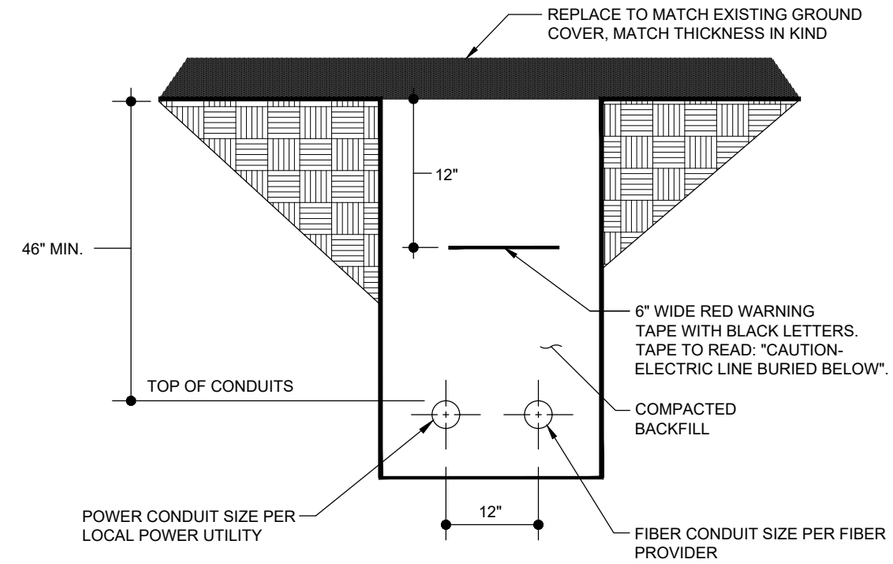

NOTE: TYPICAL SPACING FOR ALL UNDERGROUND CONDUITS.

2 TRENCH DETAIL (IF REQUIRED) N.T.S.

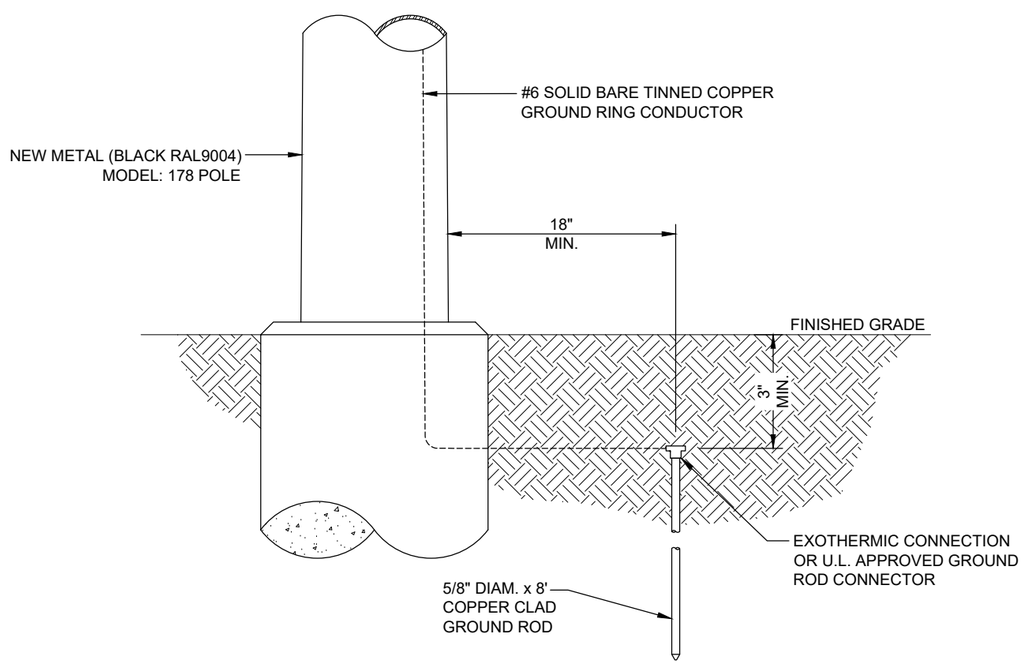

3 GROUND ROD DETAIL N.T.S.

4 DETAIL NOT IN USE

PREPARED FOR:

verizon

PREPARED BY:

TeleCAD Wireless
1961 NORTHPOINT BLVD, SUITE 130
HIXSON, TN 37343
PH: 423-843-9500
FAX: 423-843-9509

DRAWING NOTICE:
THE INFORMATION CONTAINED IN THIS SET OF DOCUMENTS IS PROPRIETARY BY NATURE. ANY USE OR DISCLOSURE OTHER THAN THAT WHICH RELATES TO THE CLIENT IS STRICTLY PROHIBITED.

DRAWN BY:	TMR
CHECKED BY:	CTD

REVISIONS

NO.	DATE	BY	DESCRIPTION
0	10/21/21	AJD	CONSTRUCTION ISSUE
C	07/16/21	KR	PRELIMINARY REVIEW
B	03/23/21	BRP	PRELIMINARY REVIEW
A	03/25/20	TMR	PRELIMINARY REVIEW

ENGINEER'S STAMP:

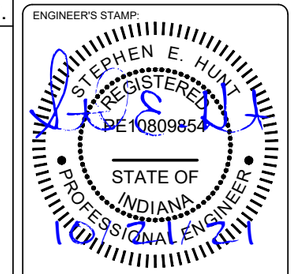

NOT VALID WITHOUT P.E. STAMP & SIGNATURE

SITE NAME: GN INDY 1235

ADDRESS: 4363 BITTERSWEET LN GREENWOOD, IN 46142

COUNTY: JOHNSON

LATITUDE: 39° 37' 7.284" N

LONGITUDE: 86° 11' 15.216" W

DESIGN TYPE: RAWLAND

SHEET TITLE: ELECTRICAL DETAILS

DRAWING NO.	REVISION:
E2	0

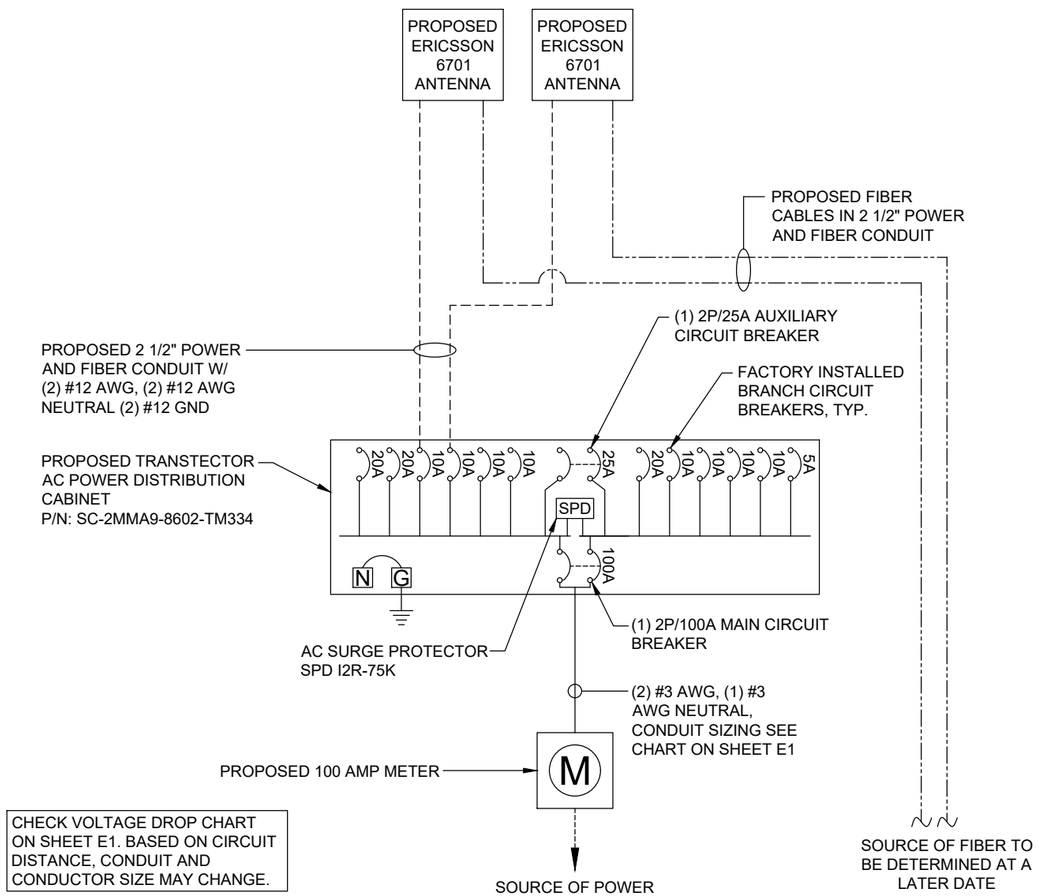

CHECK VOLTAGE DROP CHART ON SHEET E1. BASED ON CIRCUIT DISTANCE, CONDUIT AND CONDUCTOR SIZE MAY CHANGE.

1 ELECTRICAL DIAGRAM N.T.S.

2 NOT IN USE

PREPARED FOR:

verizon

PREPARED BY:

TeleCAD Wireless
1961 NORTHPOINT BLVD, SUITE 130
HIXSON, TN 37343
PH: 423-843-9500
FAX: 423-843-9509

DRAWING NOTICE:
THE INFORMATION CONTAINED IN THIS SET OF DOCUMENTS IS PROPRIETARY BY NATURE. ANY USE OR DISCLOSURE OTHER THAN THAT WHICH RELATES TO THE CLIENT IS STRICTLY PROHIBITED.

DRAWN BY:	TMR
CHECKED BY:	CTD

REVISIONS

NO.	DATE	BY	DESCRIPTION
0	10/21/21	AJD	CONSTRUCTION ISSUE
C	07/16/21	KR	PRELIMINARY REVIEW
B	03/23/21	BRP	PRELIMINARY REVIEW
A	03/25/20	TMR	PRELIMINARY REVIEW

ENGINEER'S STAMP:

STEPHEN E. HUNT
REGISTERED
PE10809854
STATE OF INDIANA
PROFESSIONAL ENGINEER

NOT VALID WITHOUT P.E. STAMP & SIGNATURE

SITE NAME: GN INDY 1235

ADDRESS: 4363 BITTERSWEET LN GREENWOOD, IN 46142

COUNTY: JOHNSON

LATITUDE: 39° 37' 7.284" N

LONGITUDE: 86° 11' 15.216" W

DESIGN TYPE: RAWLAND

SHEET TITLE: SINGLE LINE DIAGRAM

DRAWING NO.	REVISION:
E3	0

GENERAL STRUCTURAL NOTES:

1. DESIGN INFORMATION AND GENERAL REQUIREMENTS:

1.1 CODES: DESIGN CONFORMS TO
a. 2012 INTERNATIONAL BUILDING CODE, W/ LOCAL AMENDMENTS.
b. 2014 INDIANA BUILDING CODE.
c. TIA-222-G, STRUCTURAL STANDARD FOR ANTENNA SUPPORTING STRUCTURES AND ANTENNAS.
d. AMERICAN CONCRETE INSTITUTE (ACI), BUILDING CODE REQUIREMENTS FOR STRUCTURAL CONCRETE 318-14.

1.2 LOADS
a. GROUND SNOW LOAD FOR PROJECT SHALL BE 30 PSF.
b. WIND LOAD SHALL BE 115 MPH ULTIMATE BASED ON ASCE 7-10 SPECIAL WIND REGION.

1.3 MISCELLANEOUS
a. CONTRACTOR SHALL VERIFY ALL DIMENSIONS, ELEVATIONS AND EXISTING CONDITIONS PRIOR TO PROCEEDING WITH THE WORK.

2. FOUNDATION NOTES:

2.1 EARTHWORK FOR FOUNDATIONS

a. FOUNDATIONS HAVE BEEN DESIGNED TO BEAR ON UNDISTURBED SOILS OR COMPACTED STRUCTURAL FILL CAPABLE OF SUPPORTING A NET ALLOWABLE BEARING PRESSURE OF 1500 PSF.
b. DESIGN, FURNISH, AND LEVEL ALL TEMPORARY SHEETING, SHORING, AND DRAINAGE TO MAINTAIN THE EXCAVATION AND PROTECT SURROUNDING STRUCTURES AND UTILITIES.
c. THOROUGHLY COMPACT BOTTOM OF FOOTINGS PRIOR TO PLACING ANY CONCRETE.
d. BACKFILL SHALL BE COMPACTED TO 95% STANDARD PROCTOR.
e. IT IS RECOMMENDED THAT THE EXCAVATION IS COMPLETED BY DRILLING INTO THE SOIL AT A DIAMETER EQUAL TO THE FINAL OUTER DIAMETER OF THE CAISSON. IT IS RECOMMENDED THAT THE CAISSON IS CAST-IN-PLACE DIRECTLY AGAINST THE EXISTING SOIL SURROUNDING THE DRILLED HOLE.
f. OVER EXCAVATION SHALL BE LIMITED TO A HOLE APPROXIMATELY 12 INCHES IN DIAMETER GREATER THAN THE SPECIFIED OUTER CAISSON DIAMETER.
g. OVER EXCAVATED AREAS SHALL BE BACKFILLED USING A LEAN CONCRETE SLURRY (FLOWABLE FILL) WITH A MINIMUM COMPRESSIVE STRENGTH OF 200 PSI. FLOWABLE FILL SHALL ONLY BE PLACED AFTER CONCRETE FORMS ARE REMOVED

2.2 GEOTECHNICAL

a. THE FOUNDATIONS SHALL NOT BEAR ON ORGANIC SOILS, VOIDS, DELETERIOUS SOILS, CONDUITS, LOOSE SOILS OR FULLY SATURATED SOILS. IF ANY OF THESE OR OTHER COMPROMISED SOIL CONDITIONS ARE PRESENT DURING CONSTRUCTION, ACTIVITIES SHOULD SIEZE IMMEDIATELY UNTIL THE ISSUE IS RESOLVED BY THE ENGINEER OF RECORD.

2.3 CONCRETE FORMWORK

a. CONCRETE CONSTRUCTION SHALL CONFORM TO "SPECIFICATIONS FOR STRUCTURAL CONCRETE," ACI 301-10
b. FORMWORK SHALL CONFORM TO "SPECIFICATIONS FOR STRUCTURAL CONCRETE," ACI 301-10
c. ANY FORMS UTILIZED TO CAST THE FOUNDATION SHALL BE FULLY REMOVED PRIOR TO PLACING FLOWABLE FILL, AND PRIOR TO PLACING THE POLE ATOP THE FOUNDATION.

2.4 REINFORCEMENT

a. REINFORCING STEEL SHALL CONFORM TO ASTM A615, GRADE 60. WELDED WIRE SHALL CONFORM TO ASTM A185 (FLAT SHEET). MINIMUM LAP SPLICE LENGTH SHALL BE 40 BAR DIAMETERS U.N.O.
BARS SHALL BE SECURELY HELD IN ACCURATE POSITION BY SUITABLE ACCESSORIES. TIE BARS, SUPPORT BARS, ETC. HOOK LENGTHS SHALL BE 12 BAR DIAMETERS.
b. CONCRETE COVER FOR REINFORCING BARS SHALL BE AS FOLLOWS, UNLESS OTHERWISE NOTED.
FOOTINGS & SLABS CAST AGAINST GROUND . . . . . 3"
CONCRETE TO BE IN CONTACT WITH GROUND OR WEATHER AT BARS GREATER THAN #5 . . . . . 2"
AT BARS #5 OR LESS. . . . . 1 1/2"

2.5 CAST IN PLACE CONCRETE NOTES

a. MINIMUM 28 DAY COMPRESSIVE STRENGTH FOR CONCRETE SHALL BE 4500 psi.
b. MAXIMUM SLUMP, PRIOR TO ADDITION OF SUPER PLASTICIZERS, AS FOLLOWS: SLUMP
FOOTINGS AND DRILLED SHAFTS. . . . . 3"
LEAN CONCRETE FOR OVER-EXCAVATION OF FOUNDATIONS. . . . . N/A
c. MIX DESIGN TO BE IN ACCORDANCE WITH ACI 318, CHAPTER 26. NO CALCIUM CHLORIDE ADMIXTURE OR OTHER ADMIXTURE CONTAINING CHLORIDES SHALL BE USED IN ANY CONCRETE.
d. COARSE AGGREGATE FOR NORMAL WEIGHT CONCRETE SHALL CONFORM TO ASTM C33 SIZE #57. COARSE AGGREGATE FOR LIGHT WEIGHT CONCRETE SHALL CONFORM TO ASTM C330 GRADED 3/4" TO 1/4".
e. COLD WEATHER PLACEMENT SHALL COMPLY WITH ACI 306.1
f. HOT WEATHER PLACEMENT SHALL COMPLY WITH ACI 305 R.
g. ALL PROJECTIONS ABOVE GRADE TO BE CHAMFERED 1:1 FOR THE ENTIRE HEIGHT OF THE PROJECTION.
h. THE MAXIMUM TEMPERATURE OF ALL CONCRETE AT DELIVERY TO THE SITE SHALL BE 85°F.
i. TOTAL DELIVERY TIME SHALL BE LESS THAN 75 MINUTES.
j. CEMENT TYPE SHALL BE TYPE II. WATER CEMENT RATIO SHALL BE 0.45 MAXIMUM.
k. AIR ENTRAINMENT TO BE 5% (±1%)

SITE ADRESSES

State of Indiana

MIKKO AHOLA
NO. 11900115
STATE OF INDIANA
PROFESSIONAL ENGINEER
07/26/21

MIKKO P. AHOLA, P.E.
ININDIANA PROFESSIONAL ENGINEER
LICENSE #PE11900115 (EXP. 07/31/2020)

CityPole Comptek

www.comptektechnologies.com
5555 CENTRAL AVE,
SUITE 100
BOULDER CO. 80301
PH: 303.531.5758
FAX: 303.531.5595

FINISH	UNIT FORMAT	DESCRIPTION
	FT-IN-LBS	8IN SMALL CELL POLE FND

DRW BY	APPR BY	ENG. BY
DAC	MPA	MS

PART NO.

PROJECT. NO.

30596

Copyright 2019 by Comptek, all rights reserved. This drawing is loaned for mutual assistance and as such is subjected to recall at any time. Information contained herein is not to be disclosed or reproduced in any form for the benefit of parties other than subcontractors and suppliers without written consent of Comptek Technologies INC.

REVISION

REV.	BY	DATE	APPR.	REVISION DESCRIPTION
01	DAC	10/16/19	MPA	INITIAL RELEASE
02	DAC	7/27/20	MPA	UPDATED NOTES

REV. 02

PREPARED FOR:

verizon

PREPARED BY:

TeleCAD Wireless
1961 NORTHPOINT BLVD, SUITE 130
HIXSON, TN 37343
PH: 423-843-9500
FAX: 423-843-9509

DRAWING NOTICE:
THE INFORMATION CONTAINED IN THIS SET OF DOCUMENTS IS PROPRIETARY BY NATURE. ANY USE OR DISCLOSURE OTHER THAN THAT WHICH RELATES TO THE CLIENT IS STRICTLY PROHIBITED.

DRAWN BY:	TMR
CHECKED BY:	CTD

REVISIONS

NO.	DATE	BY	DESCRIPTION
0	10/21/21	AJD	CONSTRUCTION ISSUE
C	07/16/21	KR	PRELIMINARY REVIEW
B	03/23/21	BRP	PRELIMINARY REVIEW
A	03/25/20	TMR	PRELIMINARY REVIEW

ENGINEER'S STAMP:

FOR REFERENCE ONLY

NOT VALID WITHOUT P.E. STAMP & SIGNATURE

SITE NAME: GN INDY 1235

ADDRESS: 4363 BITTERSWEET LN GREENWOOD, IN 46142

COUNTY: JOHNSON

LATITUDE: 39° 37' 7.284" N

LONGITUDE: 86° 11' 15.216" W

DESIGN TYPE: RAWLAND

SHEET TITLE: FOUNDATION DESIGN

DRAWING NO. S1

REVISION: 0

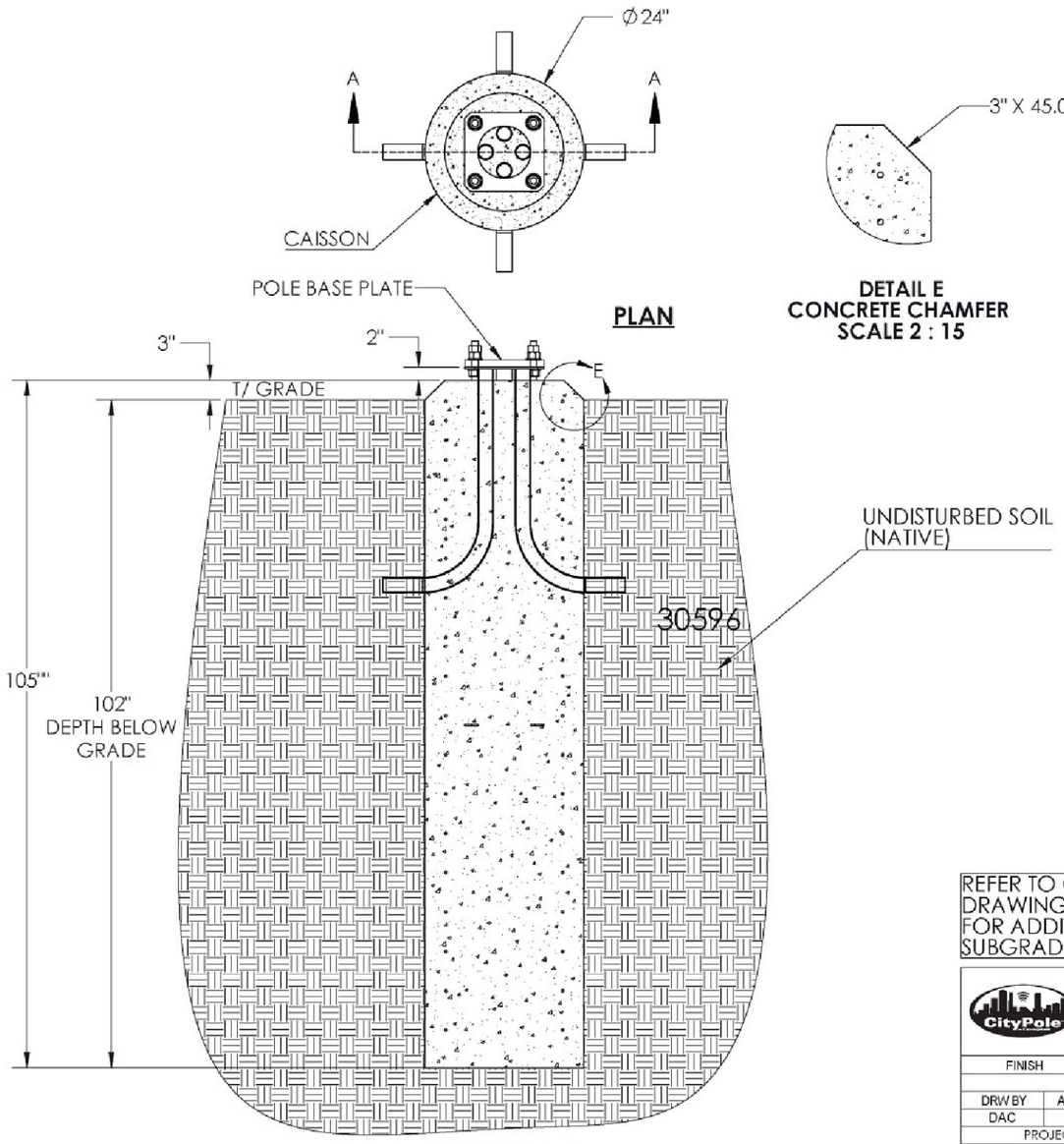

SECTION A-A
CAST IN PLACE CAISSON - CIVIL

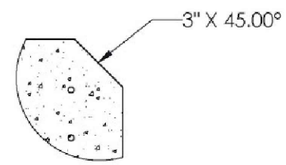

DETAIL E
CONCRETE CHAMFER
SCALE 2 : 15

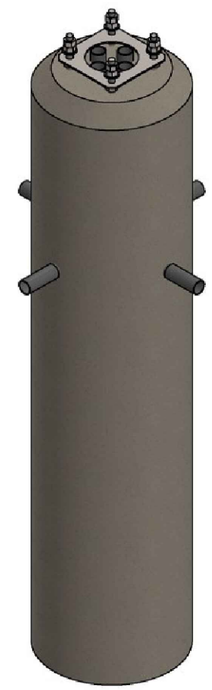

REFER TO CONSTRUCTION DRAWINGS (BY OTHERS) FOR ADDITIONAL SUBGRADE REQUIREMENTS

SITE ADRESSES
State of Indiana

MIKKO AHOLA
REGISTERED
NO. 11900115
STATE OF INDIANA
PROFESSIONAL ENGINEER
07/27/2021

MIKKO P. AHOLA, P.E.
ININDIANA PROFESSIONAL ENGINEER
LICENSE #PE11900115 (EXP. 07/31/2020)

CityPole Comptek

www.comptektechnologies.com
5555 CENTRAL AVE,
SUITE 100
BOULDER CO, 80301
PH: 303.531.5758
FAX: 303.531.5595

REVISION				
REV.	BY	DATE	APPR.	REVISION DESCRIPTION
01	DAC	10/16/19	MPA	INITIAL RELEASE
02	DAC	7/27/20	MPA	UPDATED NOTES

FINISH	UNIT FORMAT	DESCRIPTION
	FT-IN-LBS	8IN SMALL CELL POLE FND

DRW BY	APPR BY	ENG. BY
DAC	MPA	MS

PART NO.

PROJECT. NO.
30596

Copyright 2019 by Comptek, all rights reserved. This drawing is loaned for mutual assistance and as such is subjected to recall at any time. Information contained herein is not to be disclosed or reproduced in any form for the benefit of parties other than subcontractors and suppliers without written consent of Comptek Technologies INC.

REV. 02

PREPARED FOR:
verizon

PREPARED BY:
TeleCAD Wireless
1961 NORTHPOINT BLVD, SUITE 130
HIXSON, TN 37343
PH: 423-843-9500
FAX: 423-843-9509

DRAWING NOTICE:
THE INFORMATION CONTAINED IN THIS SET OF DOCUMENTS IS PROPRIETARY BY NATURE. ANY USE OR DISCLOSURE OTHER THAN THAT WHICH RELATES TO THE CLIENT IS STRICTLY PROHIBITED.

DRAWN BY:	TMR
CHECKED BY:	CTD

REVISIONS

NO.	DATE	BY	DESCRIPTION
0	10/21/21	AJD	CONSTRUCTION ISSUE
C	07/16/21	KR	PRELIMINARY REVIEW
B	03/23/21	BRP	PRELIMINARY REVIEW
A	03/25/20	TMR	PRELIMINARY REVIEW

ENGINEER'S STAMP:
FOR REFERENCE ONLY
NOT VALID WITHOUT P.E. STAMP & SIGNATURE

SITE NAME: GN INDY 1235
ADDRESS: 4363 BITTERSWEET LN GREENWOOD, IN 46142
COUNTY: JOHNSON
LATITUDE: 39° 37' 7.284" N
LONGITUDE: 86° 11' 15.216" W
DESIGN TYPE: RAWLAND
SHEET TITLE: FOUNDATION DESIGN

DRAWING NO. S2
REVISION: 0

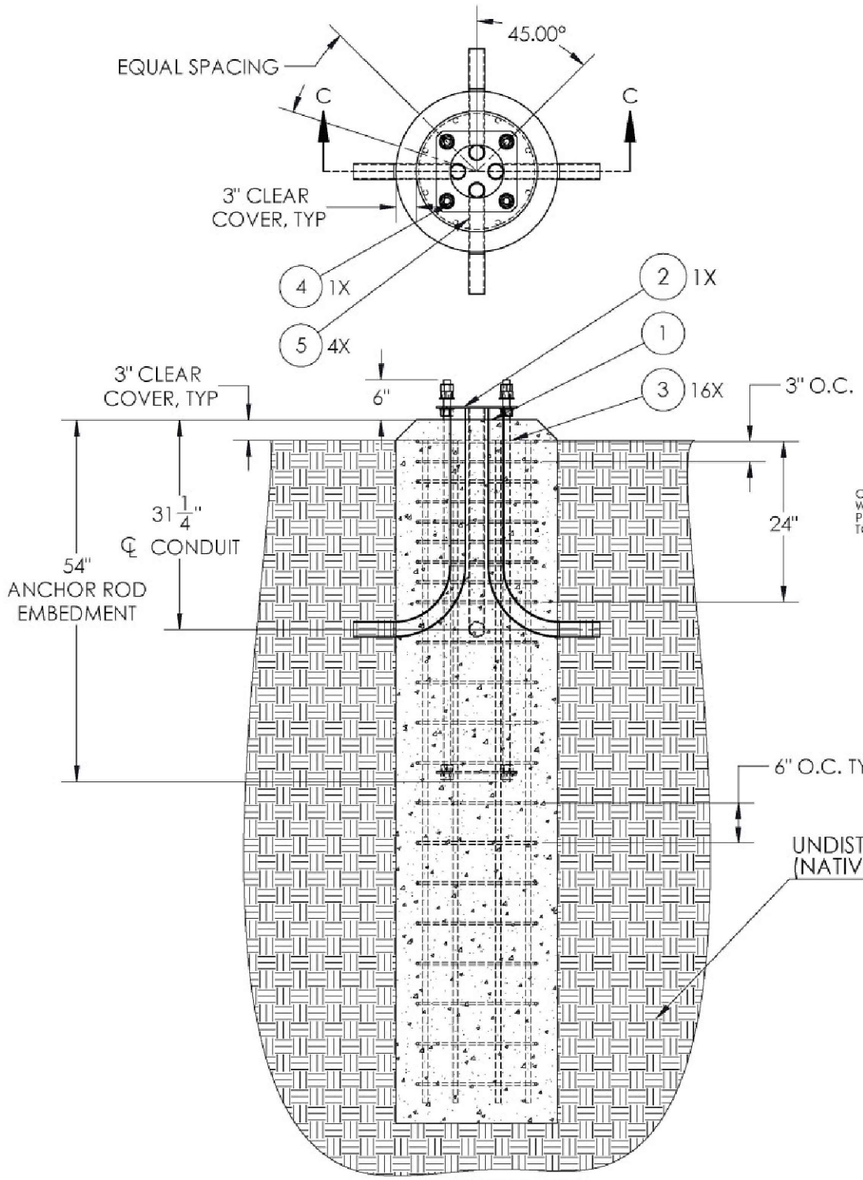

SECTION C-C
CAST IN PLACE CAISSON - REINFORCEMENT

ITEM NO.	QTY.	Description	Weight (lbs)
1	1	4500 psi Concrete Caisson	4091.6
2	8	#6 Grade 60 Vertical Steel Reinforcement Bar	12.3
3	16	#3 Grade 60 Steel Ties	1.7
4	1	Anchor Cage	68.15
5	4	2in PVC Conduit	2.22

SITE ADRESSES
State of Indiana

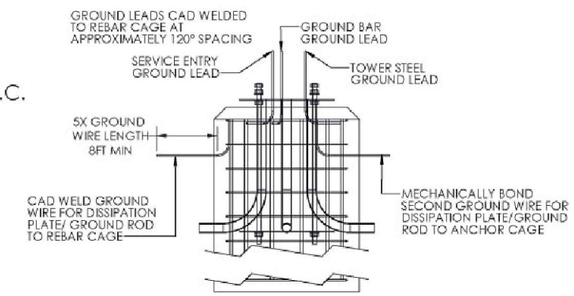

TYP GROUNDING DETAIL

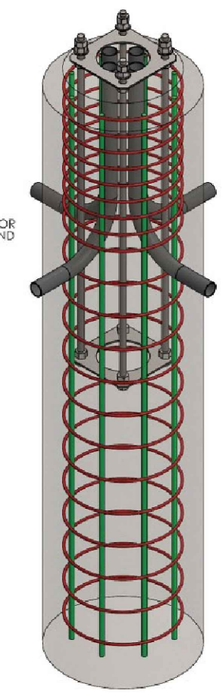

REFER TO CONSTRUCTION DRAWINGS (BY OTHERS) FOR ADDITIONAL SUBGRADE REQUIREMENTS

MIKKO P. AHOLA, P.E.
IN INDIANA PROFESSIONAL ENGINEER
LICENSE #PE11900115 (EXP. 07/31/2020)

www.comptektechnologies.com
5555 CENTRAL AVE,
SUITE 100
BOULDER CO. 80301
PH: 303.531.5758
FAX: 303.531.5595

REVISION

REV.	BY	DATE	APPR.	REVISION DESCRIPTION
01	DAC	10/16/19	MPA	INITIAL RELEASE
02	DAC	7/27/20	MPA	UPDATED NOTES

FINISH	UNIT FORMAT	DESCRIPTION
	FT-IN-LBS	8IN SMALL CELL POLE FND
DRW BY: DAC	APPR BY: MPA	ENG. BY: MS
PROJECT. NO.		PART NO.
30596		

Copyright 2019 by Comptek, all rights reserved. This drawing is loaned for mutual assistance and as such is subjected to recall at any time. Information contained herein is not to be disclosed or reproduced in any form for the benefit of parties other than subcontractors and suppliers without written consent of Comptek Technologies INC.

REV. 02

PREPARED FOR:
verizon

PREPARED BY:
TeleCAD Wireless
1961 NORTHPOINT BLVD, SUITE 130
HIXSON, TN 37343
PH: 423-843-9500
FAX: 423-843-9509

DRAWING NOTICE:
THE INFORMATION CONTAINED IN THIS SET OF DOCUMENTS IS PROPRIETARY BY NATURE. ANY USE OR DISCLOSURE OTHER THAN THAT WHICH RELATES TO THE CLIENT IS STRICTLY PROHIBITED.

DRAWN BY:	TMR
CHECKED BY:	CTD

REVISIONS

NO.	DATE	BY	DESCRIPTION
0	10/21/21	AJD	CONSTRUCTION ISSUE
C	07/16/21	KR	PRELIMINARY REVIEW
B	03/23/21	BRP	PRELIMINARY REVIEW
A	03/25/20	TMR	PRELIMINARY REVIEW

ENGINEER'S STAMP:
FOR REFERENCE ONLY
NOT VALID WITHOUT P.E. STAMP & SIGNATURE

SITE NAME: GN INDY 1235
ADDRESS: 4363 BITTERSWEET LN GREENWOOD, IN 46142
COUNTY: JOHNSON
LATITUDE: 39° 37' 7.284" N
LONGITUDE: 86° 11' 15.216" W
DESIGN TYPE: RAWLAND
SHEET TITLE: FOUNDATION DESIGN
DRAWING NO.: S3
REVISION: 0

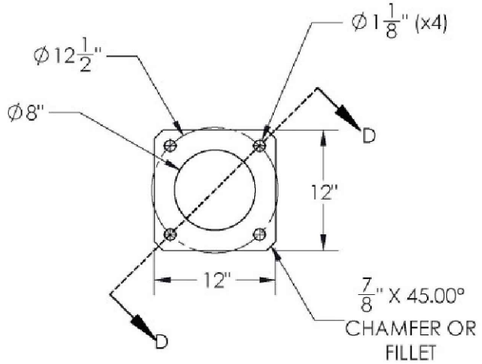

TEMPLATE RING PLAN

SECTION D-D

ITEM NO.	DESCRIPTION	QTY.
1	HARDENED WASHERS 436 HDG	8
2	1" HEX NUT HDG	20
3	1"x60" A193 B7 threaded Rods HDG	4
4	8IN POLE TEMPLATE RING	2

SITE ADRESSES

State of Indiana

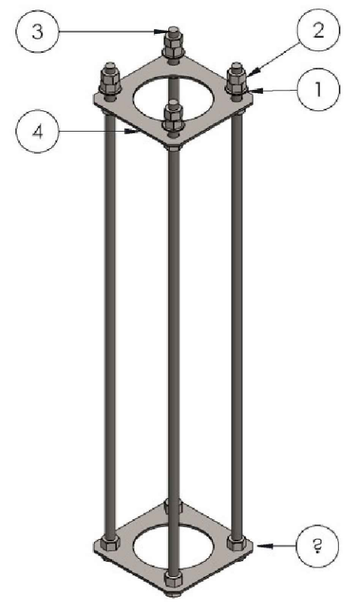

ANCHOR CAGE ASSEMBLY ISOMETRIC

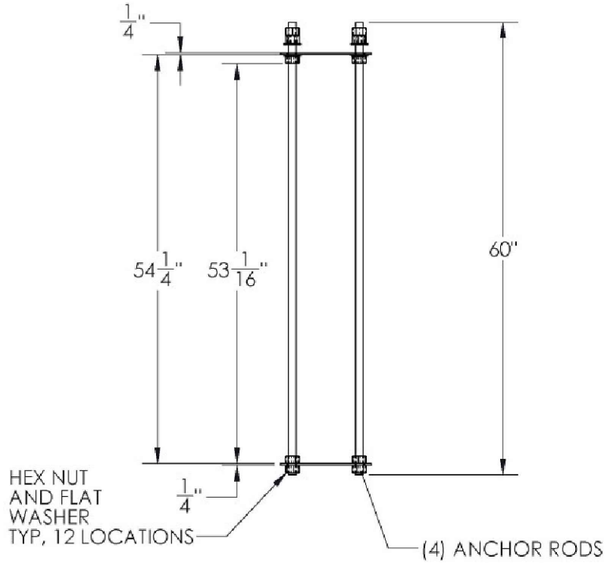

ANCHOR CAGE ASSEMBLY ELEVATION

MIKKO P. AHOLA, P.E.
IN/INDIANA PROFESSIONAL ENGINEER
LICENSE #PE11900115 (EXP. 07/31/2020)

CityPole Comptek

www.comptektechnologies.com
5555 CENTRAL AVE,
SUITE 100
BOULDER CO. 80301
PH: 303.531.5758
FAX: 303.531.5595

REVISION

REV.	BY	DATE	APPR.	REVISION DESCRIPTION
01	DAC	10/16/19	MPA	INITIAL RELEASE
02	DAC	7/27/20	MPA	UPDATED NOTES

FINISH	UNIT FORMAT	DESCRIPTION
	FT-IN-LBS	8IN SMALL CELL POLE FND

DRW BY	APPR BY	ENG. BY
DAC	MPA	MS

PART NO.

PROJECT. NO.

30596

Copyright 2019 by Comptek, all rights reserved. This drawing is loaned for mutual assistance and as such is subjected to recall at any time. Information contained herein is not to be disclosed or reproduced in any form for the benefit of parties other than subcontractors and suppliers without written consent of Comptek Technologies INC.

REV. 02

PREPARED FOR:

verizon

PREPARED BY:

TeleCAD Wireless

1961 NORTHPOINT BLVD, SUITE 130
HIXSON, TN 37343
PH: 423-843-9500
FAX: 423-843-9509

DRAWING NOTICE:
THE INFORMATION CONTAINED IN THIS SET OF DOCUMENTS IS PROPRIETARY BY NATURE. ANY USE OR DISCLOSURE OTHER THAN THAT WHICH RELATES TO THE CLIENT IS STRICTLY PROHIBITED.

DRAWN BY:	TMR
CHECKED BY:	CTD

REVISIONS

NO.	DATE	BY	DESCRIPTION
0	10/21/21	AJD	CONSTRUCTION ISSUE
C	07/16/21	KR	PRELIMINARY REVIEW
B	03/23/21	BRP	PRELIMINARY REVIEW
A	03/25/20	TMR	PRELIMINARY REVIEW

ENGINEER'S STAMP:

FOR REFERENCE ONLY

NOT VALID WITHOUT P.E. STAMP & SIGNATURE

SITE NAME: GN INDY 1235

ADDRESS: 4363 BITTERSWEET LN GREENWOOD, IN 46142

COUNTY: JOHNSON

LATITUDE: 39° 37' 7.284" N

LONGITUDE: 86° 11' 15.216" W

DESIGN TYPE: RAWLAND

SHEET TITLE: FOUNDATION DESIGN

DRAWING NO. S4

REVISION: 0

GN INDY 1235 – 39.61869, -86.18756

Site Type: VZW - NEW METAL POLE WITH LIGHT

ROW: Leaning Tree Rd

E911 Address: 4363 BITTERSWEET LN, GREENWOOD, IN 46142

Nearest Intersection**:** Leaning Tree Rd and Bittersweet

Ln Nearest Address: 4359 Bittersweet Ln

City: Greenwood

Zip Code: 46142

FINDINGS OF FACT, DEVELOPMENT STANDARDS VARIANCE

JOHNSON COUNTY BOARD OF ZONING APPEALS

1. The approval will not be injurious to the public health, safety, morals and general welfare of the community because:

This request is concerning the placement of a small cell wireless facilities in the public right of way.

This facility meets all Federal, State, FAA and FCC safety guidelines.

2. The use and value of the area adjacent to the property included in the variance will not be affected in a substantially adverse manner because:

The locations presented in this proposal are consistent with rules and guidelines for small cell siting within Johnson County. In regards to use or value of adjacent property the FCC has create guidelines for what the County can consider when reviewing these type of proposals.

3. The strict application of the terms of the Zoning Ordinance will result in practical difficulties in the use of the property because:

The strict application of the terms of the zoning ordinance would result in a denial of any new small cell wireless structure in the public right of way. Our position is that interpretation would be in direct opposition to State and Federal law.

FINDINGS OF FACT, SPECIAL EXCEPTION

JOHNSON COUNTY BOARD OF ZONING APPEALS

1. The use shall be specifically identified as a special exception in this Ordinance for the zoning district in question because:

Per Resolution No. 2017-R-3 of the Board of Commissioners of Johnson County, any request by a communication provider to place a new small cell facility within the right of way in and contiguous to all major residential subdivisions within the unincorporated Johnson County requires a special exception.

2. The special exception can be served with adequate utilities, access roads, drainage and other necessary facilities because:

The proposed small cell facilities will be served by utilities which already exist in the area, or which can be brought to the proposed location within existing right of way or utility easements. The improvements necessary to support the proposed small cell facility will be installed in accordance with all applicable local, state and federal laws.

3. The special exception shall not involve any element or cause any condition that may be dangerous, injurious or noxious to any other property or persons, and shall comply with any and all design development standards for the use identified in this Ordinance because:

This facility design and use meets all Federal, State, FAA and FCC safety guidelines. The proposed small cell facilities will be located in a way which does not interfere with clear sight triangles or other impairments to the utilization of the right of way and is located in a way to best serve users who desire reliable wireless coverage and high speed internet service in residential districts.

4. The special exception shall be sited, oriented and landscaped to produce a harmonious relationship of buildings and grounds to adjacent buildings and property because:

The proposed small cell installation is not of any greater height than permitted by applicable Indiana statute. The nearby residential districts have not adopted neighborhood specific guidelines regarding preferred locations and aesthetic guidelines and therefore efforts have been made to propose similar design and materials to other utility poles and light poles in the public right of way.

5. The special exception shall produce a total visual impression and environment which is consistent with the environment of the neighborhood because:

The proposed small cell installation is not of any greater height than permitted by applicable Indiana statute. The nearby residential districts have not adopted neighborhood guidelines regarding preferred locations and aesthetic guidelines and therefore efforts have been made to propose similar design and materials to other utility poles and light poles in the public right of way.

6. The special exception shall organize vehicular access and parking to minimize traffic congestion in the neighborhood because:

The proposed installation is an unmanned small cell facility located within the public right of way. After completion of construction, the facility will have visits only necessary for repairs or maintenance and will therefore not impact traffic patterns or traffic volume in any meaningful way.

7. The special exception shall preserve the purpose of this Ordinance, and shall not interfere substantially with the Comprehensive Plan because:

The use is a permitted use in the public right of way. The proposed small cell facility will deliver the latest generation of wireless service and high speed internet access in a way which allows and promotes the ongoing and orderly development of communities. Prohibiting the small cell facility as proposed will materially inhibit the delivery of this technology to the end users of the service.

The installation, use and maintenance of the proposed small cell facility will be in conjunction with all local, state and federal regulations regarding the installation of this technology in the public right of way.

ON-SITE NOTICE REFUNDABLE DEPOSIT FORM

JOHNSON COUNTY DEPARTMENT OF PLANNING AND ZONING

On-Site Public Notice Sign Instructions

1. The applicant must provide a $25.00 deposit (via cash, check or credit/debit card) to the Department of Planning and Zoning for each required on-site public notice sign, which will be provided by the Department of Planning and Zoning.
2. The land use petitioner must display the sign along the subject property's street frontage, so that the sign is prominent and readable from the adjoining street. If the subject lot is especially large or adjoins more than one street, staff may require placement of additional on-site signs.
3. The sign(s) must be posted on site at least 21 calendar days prior to the scheduled hearing, and must remain posted until the associated land use petition has been fully resolved.
4. The applicant must return the sign(s) to the Department of Planning and Zoning in good condition within 30 days of completion of the land use petition to be eligible for a full refund. The refund will be mailed to the petitioner within a maximum of 4 weeks of the return of the sign(s).

I have read and understand the above instructions and requirements regarding the posting of required on-site public notice signage, and have paid the required refundable deposit.

David M Bates - TeleCAD Wireless - on behalf of Verizon Wireless

Petitioner/Representative Signature

2/15/2022

Date

Case Number (Office Use)

AFFIDAVIT OF NOTICE OF PUBLIC HEARING

JOHNSON COUNTY DEPARTMENT OF PLANNING AND ZONING

This form must be completed and submitted to the Department of Planning and Zoning no later than the Friday prior to hearing.

I/we, _____, do hereby certify that notice of public hearing by the Board of Zoning Appeals of Johnson County to consider Case Number _____was mailed by *certificate of mailing* to the persons identified on the attached list, and that these persons, who were included in the most recent and current records of the Johnson County Mapping Department, represent all those required to be notified of this petition.

Please attach the list of addresses provided by the Department of Planning & Zoning.

Said notices of public hearing were mailed by certificate of mailing on or before *(mailing date)* _____, 20 _____, being at least 21 days prior to *(hearing date)* _____, 20 _____, the date of the Public Hearing.

I/we further hereby certify that the required public notice sign was posted in a conspicuous place on the subject property on *(date)* _____, 20 ____, also being at least 21 days prior to the scheduled public hearing.

The above information, to my knowledge and belief, is true and correct.

_____
Signature of Petitioner

State of Indiana)
) SS:
County of)

Subscribed and sworn to before me this_____day of _____,_____

My commission expires:_____ _____
Notary Public

County of Residence:_____ _____